RE: CAF10-00016

Scale 1" = 20 ft

Loca Luna

136 SW Washington

APPROVED
JUL 29 2010
DEVELOPMENT SERVICES
CITY OF CORVALLIS

REVISED PLANS

Tree △
19" deep x 22" Chair □
Street Lamp ◎
3'6" Table ○
Garbage Can ▯

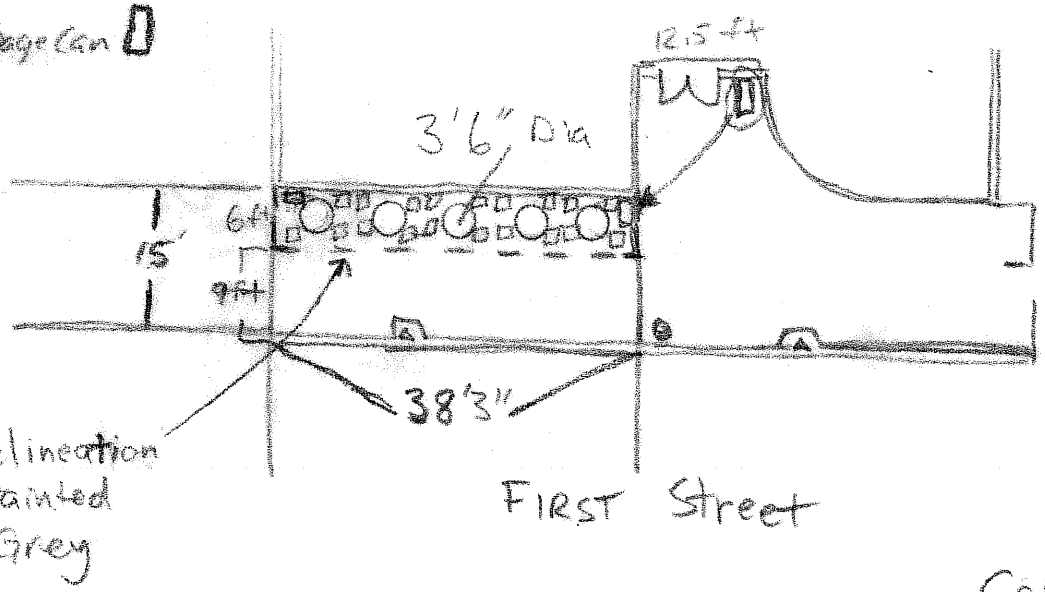

Enotera Wine Bar

RECEIVED
JUL 22 2010
DEVELOPMENT SERVICES

Cafe Area: 229.5 sq ft.

Exhibit A PG 1/1