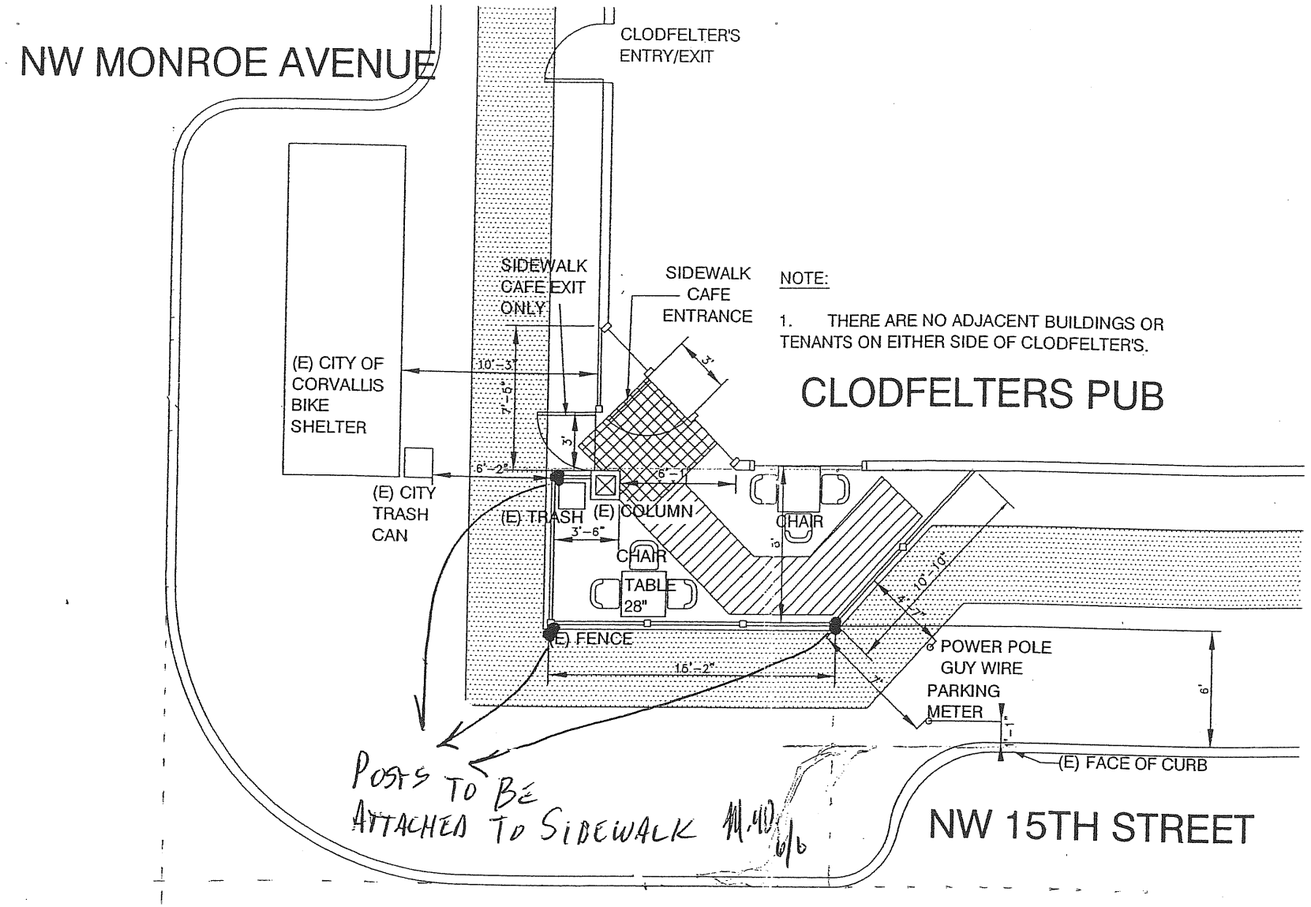

NOTE:

1. THERE ARE NO ADJACENT BUILDINGS OR TENANTS ON EITHER SIDE OF CLODFELTER'S.

CLODFELTERS PUB

RE: 1501 NW MONROE

149 # AREA

CAF11-00001

LEGEND

(N) NEW
(E) EXISTING

- 4" WIDE BROWN PAINTED DELINEATION LINE
- 36" MIN. WIDTH MANEUVERING AREA
- ACCESSIBLE MANEUVERING AREA PER 2007 OSSC
- 48" CLEAR ACCESSIBLE PATH
- FENCE

APPROVED
APR 25 2011
DEVELOPMENT SERVICES
CITY OF CORVALLIS

RECEIVED
MAY 21 2008
DEVELOPMENT SERVICES

EXHIBIT A PG 1/4

1/8" = 1'-0"

0 4 8 16

No.	REVISION:	DATE:

DEVCO engineering inc.
Corvallis Oregon
(541) 757-8991
245 NE CONIFER, P.O. BOX 1211
CORVALLIS, OR. 97339
WWW.DEVCOENGINEERING.COM

©COPYRIGHT 2004
DEVCO ENGINEERING, INC.
ALL RIGHTS RESERVED.

PROJECT: CLODFELTER'S PUBLIC HOUSE SIDEWALK CAFE PLAN

PROJECT LOCATION: 1501 W MONROE AVENUE CORVALLIS, OR

NW - MW 6/10/08

SHEET TITLE: SIDEWALK CAFE PLAN

JOB NO.	08-439
ISSUED:	05 FEB 08
DRAWN BY:	DEVCO
DRAWING:	A8.00

APPROVED
APR 25 2011
DEVELOPMENT SERVICES
CITY OF CORVALLIS

NOTE

1. FENCE IS CONSTRUCTED OF CEDAR BOARDS. FRAME IS ANCHORED TO BUILDING AND CONCRETE BUCKETS, AND IS NOT MOVEABLE WITHOUT THE AID OF TOOLS.

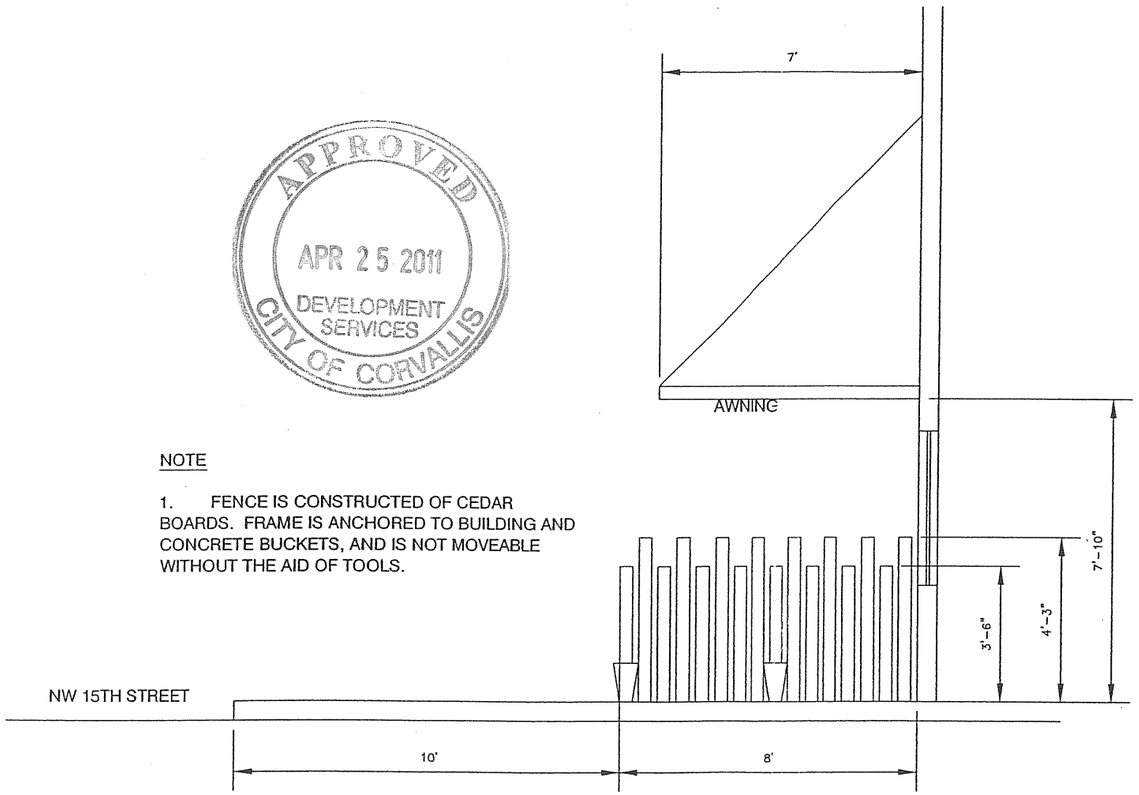

TYPICAL ELEVATION CLODFELTERS SIDEWALK CAFE 1/4" = 1'-0"

CAF11-00001

EXHIBIT A PG 2/4

RECEIVED
MAY 21 2008

No.	REVISION:	DATE:

DEVCO engineering inc.
Corvallis Oregon
(541) 757-9991
245 NE CONIFER, P.O. BOX 121
CORVALLIS, OR. 97339
WWW.DEVCOENGINEERING.COM

©COPYRIGHT 2004
DEVCO ENGINEERING, INC.
ALL RIGHTS RESERVED.

PROJECT:
CLODFELTER'S PUBLIC HOUSE
SIDEWALK CAFE PLAN

PROJECT LOCATION:
1501 W MONROE AVENUE
CORVALLIS, OR

AW - 6/10/08

SHEET TITLE:
SIDEWALK CAFE ELEVATION

JOB NO.	08-439
ISSUED:	05 FEB 08
DRAWN BY:	DEVCO
DRAWING:	A8.01

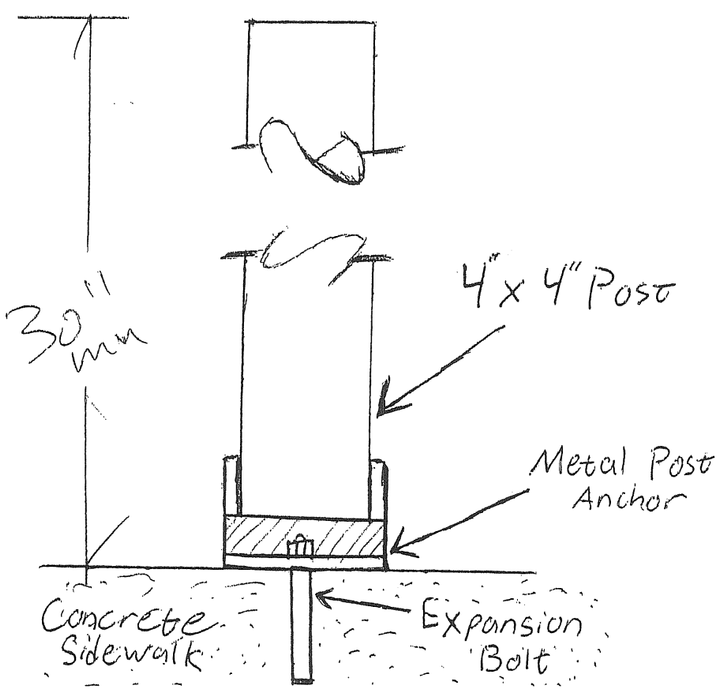

APPROVED
APR 25 2011
DEVELOPMENT SERVICES
CITY OF CORVALLIS

CAF11-00001

EXHIBIT A PG. 3/4

RECEIVED
JUN 10 2008
DEVELOPMENT SERVICES

CLODFELTERS
Corvallis' Best Burger
1501 NW Monroe Ave.
Corvallis, Oregon 97330
www.clodfelterspub.com · 758-4452

drillspot.com

Welcome to DrillSpot.com!

Live Help

Cart - Empty

Search Products GO!

APPLIANCES | HOME GOODS | OUTDOOR LIVING | KITCHEN | PAINT | LIGHTING | BUILDING SUPPLIES | TOOLS & HARDWARE | CONTRACTORS

>> Building Supplies > Building Materials > Concrete & Masonry

Usp Structural Connectors **PA44-BP-WEST 4X4 Post Anchor**
SKU - 306959

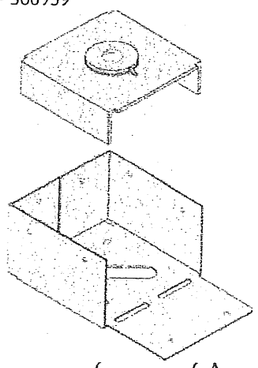

List Price: $4.74
You Save: $0.79
DrillSpot Price: $3.95

3-5 Business Day Shipping $6.46

This item is currently out of stock. We can notify you when it becomes available.

NOTIFY ME

Review this product!

Customer Testimonials >>

Product Recommendations

Usp Structural Connectors EPB6608-WEST 6X6 Elev Post Base - $8.84

Usp Structural Connectors HFAHD22 2-1/16"Foundation Strap - $6.67

Usp Structural Connectors ACRNOZ 6PK Rept Mixe Nozzle - $5.10

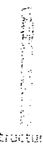

Usp Structural Connectors WAS46-WEST 4X6 Wet Anchor - $7.84

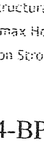

Usp Structural Connectors WT-22 500PK 7/8X6-1/2WALL Tie - $55.10

Find Similar Products
BRAND
Usp Structural Connectors (22)
Amerimax Home Products (1)
Simpson Strong Tie (5)

Anchored with Lag bolt into concrete Anchor

4 x 4 Post Anchor, 12 Gauge Stand Off & Washer, 18 Gauge Support Cover, Used To Secure Wood Posts To Concrete Footings, These Post Anchors Also Provide Moisture Damage Protection, Features A 1" Stand Off Plate To Elevate Wood Posts Above Concrete Surfaces, Install Using One 1/2" Bolt, & Eight 16d Nails, Bulk Pack, Reference #Ab44.

Customer Reviews
Be the first to Review!

Tags

APPROVED
JUN 17 2008
DEVELOPMENT SERVICES
CITY OF CORVALLIS

EXPANSION BOLT TO BE USED TO ATTACH FENCE TO SIDEWALK.

PER. STEVE HESSEL
4:00 PM
CONVERSATION
MW 6/6

RE: CLOD FOLTER'S SIDEWALK CAFE FENCE ANCHOR

CAF11-00001

EXHIBIT A PG 4/4