SSW ENGINEERS INC
CIVIL • STRUCTURAL • BUILDING DESIGN
SURVEYING • LAND USE PLANNING
2350 Oakmont Way, Suite 105 Eugene, OR 97401
(541) 485-8383 Fax (541) 485-8384

ES&A Sign and Awning	SHEET NO.	COVER
Building 200-400	PROJECT NO.	13-7133-31
Corvallis, Oregon	BY	TAC
New Canopy	DATE	12/13/31

STRUCTURAL DESIGN

Design is governed by: 2010 State of Oregon Structural Specialty Code

Wind - Method 2 - Analytical Procedure Mph **95** Exp. **B**

Loading;

Roof live load (snow)	**20** psf
Roof dead load	**3** psf

Material Spec Includes:

Masonry --- f'm =	**1,500** psi,
Rebar --- ASTM A-615, Grade 60,	**60,000** psi,
Aluminum Tube Sections --- ASTM 6063-T52,	
Weld electrode --- ESAB 4043,	

- Special inspection required on post installed anchors per 2010 OSSC

VOID 1-21-14

BLD14-00008/BLD14-00009

REGISTERED PROFESSIONAL ENGINEER 14,062 OREGON JULY 26, 1988 RALPH W. WILSON

EXPIRES: 6/30/14

RECEIVED JAN 09 2014 DEVELOPMENT SERVICES

SSW ENGINEERS INC
CIVIL • STRUCTURAL • BUILDING DESIGN
SURVEYING • LAND USE PLANNING
2350 Oakmont Way, Suite 105 Eugene, OR 97401
(541) 485-8383 Fax (541) 485-8384

Wind Design: Method 2 - Analytical Procedure, SEI/ASCE 7-05

Components & Cladding (6.5.12.4.1)

Exposure: **B** Wind load: **95** mph

Enclosure: **Enclosed** Importance: **II**

Non-Hurricane Prone Regions

B = 200 ft
L = 130 ft
G = 0.85
I = 1.00
Kzt = (6.5.7.2) 1.00
Kd = (tbl 6-4) 0.85
qh = .00256 Kz Kzt Kd V^2 I = **Kz * 19.64**
Mean Roof Height = 30 ft
Kz (tbl 6-3) = 0.70
qh = 13.76

Plan View

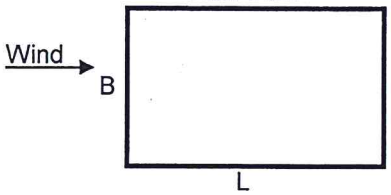

Sign Convention

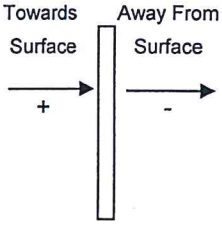

h/L = 0.231
Roof Pitch = 8 :12
θ = 33.69

a = 12 ft
GCpi = 0.18 ±
qhGCpi = 2.48 ± psf

	Zone	Area (sq ft)	GCp	Gcpi	GCp-Gcpi	P (psf)
Roof	1+	10	0.90	-0.18	1.08	14.86
Roof	1-	10	-1.00	0.18	-1.18	-16.24
Roof	1+	100	0.80	-0.18	0.98	13.48
Roof	1-	100	-0.80	0.18	-0.98	-13.48
Roof	2+	10	0.90	-0.18	1.08	14.86
Roof	2-	10	-1.20	0.18	-1.38	-18.99
Roof	2+	100	0.80	-0.18	0.98	13.48
Roof	2-	100	-1.00	0.18	-1.18	-16.24
Roof	3+	10	0.90	-0.18	1.08	14.86
Roof	3-	10	-1.20	0.18	-1.38	-18.99
Roof	3+	100	0.80	-0.18	0.98	13.48
Roof	3-	100	-1.00	0.18	-1.18	-16.24
Wall	4+	10	1.00	-0.18	1.18	16.24
Wall	4-	10	-1.10	0.18	-1.28	-17.61
Wall	4+	500	0.70	-0.18	0.88	12.11
Wall	4-	500	-0.80	0.18	-0.98	-13.48
Wall	5+	10	1.00	-0.18	1.18	16.24
Wall	5-	10	-1.40	0.18	-1.58	-21.74
Wall	5+	500	0.70	-0.18	0.88	12.11
Wall	5-	500	-0.80	0.18	-0.98	-13.48

Effective Wind Area Roof = 80 sq ft Effective Wind Area Wall = 550 sq ft

	Zone	Area (sq ft)	GCp	Gcpi	GCp-Gcpi	P (psf)
Roof	1+	80	0.81	-0.18	0.99	13.62
Roof	1-	80	-0.82	0.18	-1.00	-13.75
Roof	2+	80	0.81	-0.18	0.99	13.62
Roof	2-	80	-1.02	0.18	-1.20	-16.50 ←
Roof	3+	80	0.81	-0.18	0.99	13.62
Roof	3-	80	-1.02	0.18	-1.20	-16.50
Wall	4+	550	0.70	-0.18	0.88	12.11
Wall	4-	550	-0.80	0.18	-0.98	-13.48
Wall	5+	550	0.70	-0.18	0.88	12.11
Wall	5-	550	-0.80	0.18	-0.98	-13.48

SSW ENGINEERS INC
CIVIL • STRUCTURAL • BUILDING DESIGN
SURVEYING • LAND USE PLANNING
2350 Oakmont Way, Suite 105 Eugene, OR 97401
(541) 485-8383 Fax (541) 485-8384

ES & A		SHEET NO.	2 OF 4
Bldgs 200-400		PROJECT NO.	13-7133-31
Corvallis, OR		BY	TAC
New Canopy		DATE	12/31/13

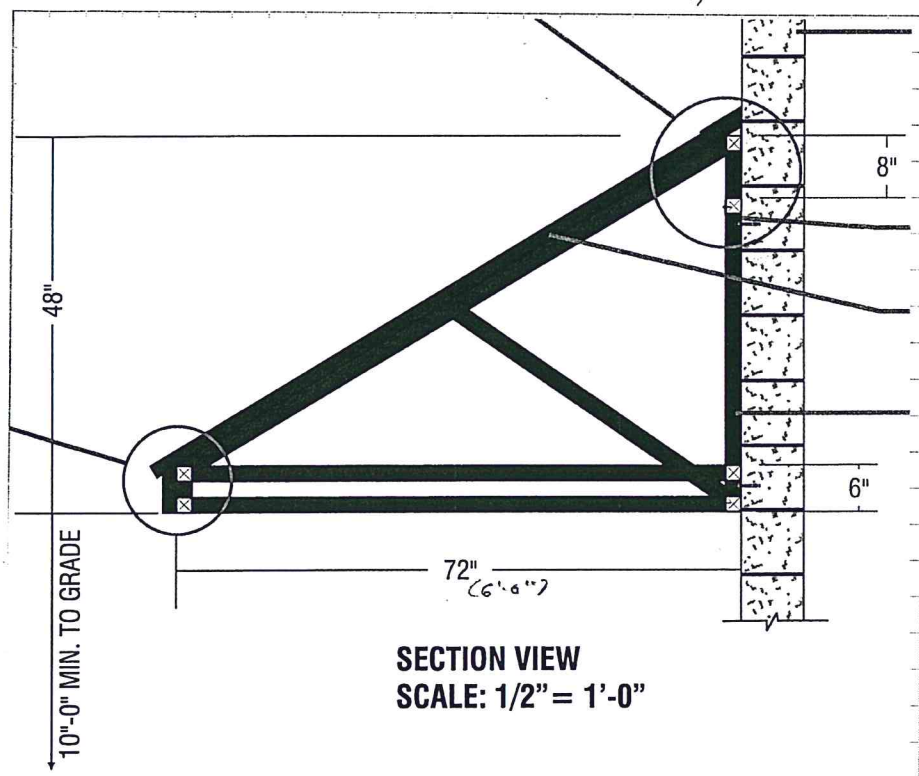

SECTION VIEW
SCALE: 1/2" = 1'-0"

All tubing is 2" x 2" x 1/8" Aluminum

Frame section @ 32" O.C. max

Snow Load = 20 psf
Dead Load = 3 psf
Total Load = 23 psf

Wind Load = 16.5 psf (See Sheet 1)

Snow load controls for bolting

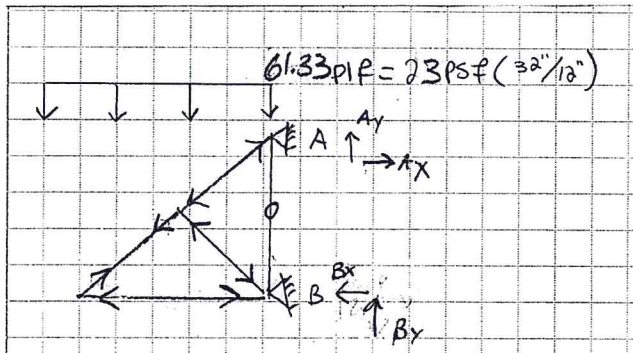

$\circlearrowleft + \Sigma M_B = 0 = 75\,plf\,(6')^2/2 - A_x(4')$

$A_x = 276^{\#}$

$\Sigma F_x = 0 = A_x - B_x \Rightarrow A_x = B_x = 276^{\#}$

$A_y = 276^{\#}$
$B_y = 162.5^{\#}$
$450^{\#} = 75\,(72''/12'')$ ✓

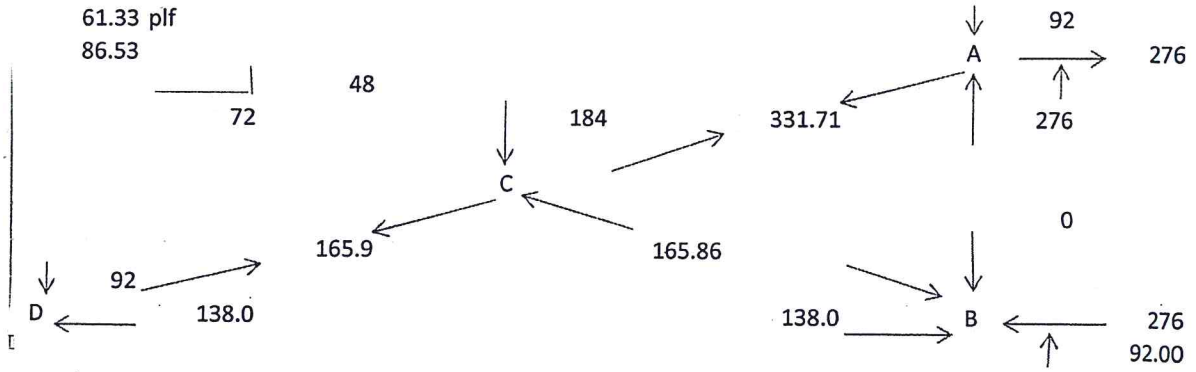

SSW ENGINEERS INC
CIVIL • STRUCTURAL • BUILDING DESIGN
SURVEYING • LAND USE PLANNING
2350 Oakmont Way, Suite 105 Eugene, OR 97401
(541) 485-8383 Fax (541) 485-8384

Aluminum Tube
6035-T5

$F_y = 16000$ psi

$F_b = 1.1 F_y = 1.1(16000)$
$= 17600$ psi

$E = 10{,}100{,}000$ psi

2" x 2" x 1/8" Aluminum tube Properties

Tube Section

Given:			Find:		
b =	2.00	in.	A =	0.938	in^2
d =	2.00	in.	I_x =	0.552	in^4
thk =	0.125	in.	S_x =	0.552	in^3
b_1 =	1.750	in.	r_x =	0.767	in
d_1 =	1.750	in.	Wt=	~~3.190~~ 1.07	plf
			I_y =	0.552	in^4
			S_y =	0.552	in^3
			r_y =	0.767	in

thk = 0.125
adj. fact. = 0

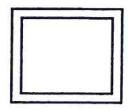

Does not include rounded corners.

Tension

$T_{max} = 331.71$#
$A = .938 in^2$
$T/A = 331$ psi < 16000 psi OK

Compression

$K\ell/r = 1.0(36")/.767" = 46.94 < 99$

$F_c = B_c - D_c \; K\ell/r$ $\quad B_c = 17.3$ ksi, $D_c = .072$ ksi (Structural Engineering Handbook 11-6, Table 4)

$F_c = 17.3 ksi - .072(46.94) ksi$
$F_c = 13.92 ksi = 13920$ psi

$P = 166$# $\Rightarrow$ $P/A = 166\#/.938 in^2 = 177$ psi $<<$ 13920 psi OK

Bending

$S_{req} = \frac{My}{F_b}$ $\quad M = 61.3 psf (32"/12")^2/8 = 54.5$ lb-ft $= 654$ lb-in

$S_{req} = 654$ in lb / 17600 psi $= .0371 in^3 < .552 in^3$ OK

SSW ENGINEERS INC
CIVIL • STRUCTURAL • BUILDING DESIGN
SURVEYING • LAND USE PLANNING
2350 Oakmont Way, Suite 105 Eugene, OR 97401
(541) 485-8383 Fax (541) 485-8384

ES & A	SHEET NO. 4	OF 4
Bldg's 200-400	PROJECT NO. 13-7133-31	
Corvallis, OR	BY TAC	
New Canopy	DATE 12/31/13	

Bracket Connection

Referencing Novak Archetecture Permit Drawings for Bldgs 200-400 Sheet SO.2, CMU walls are partially Grouted.

Due to partial Grouting An Epoxy Anchor must Be used

Z-Bracket Top & Bottom @ 32" O.C. max

(see Below) * Use: 3/8" Ø Threaded Rod w/ 2" Embed w/ Hilti HIT-HY 70 Epoxy Adhesive

ESR-2682

Allowable Tension = 390# > 276# OK
Allowable Shear = 645# > 276# OK

$$\left(\frac{f_b}{F_b}\right)^{5/3}+\left(\frac{f_s}{F_s}\right)^{5/3}=\left(\frac{276^{\#}}{390^{\#}}\right)^{5/3}+\left(\frac{276^{\#}}{645^{\#}}\right)^{5/3}=.805<1.0 \quad \text{OK}$$

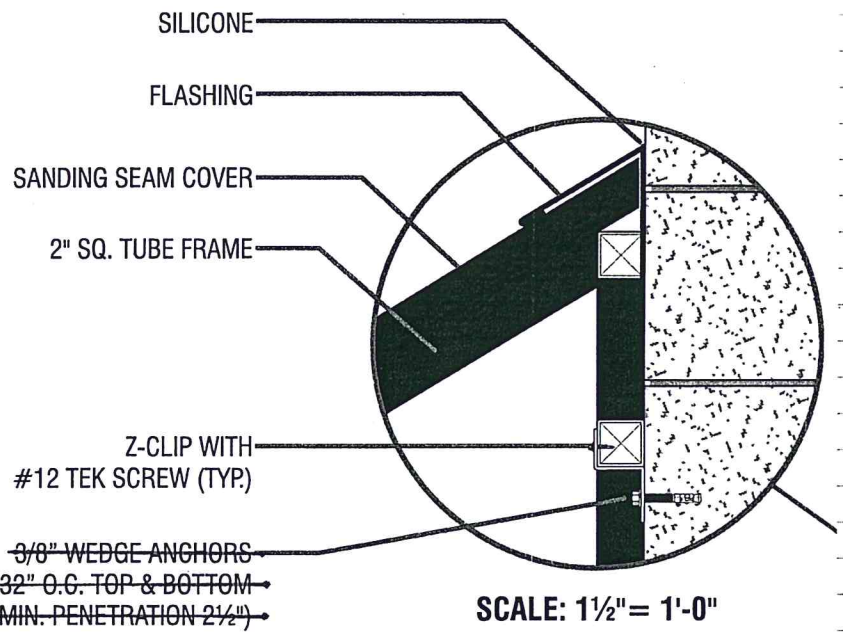

SCALE: 1½" = 1'-0"

* Note: When Attaching Epoxy Anchors Into hollow CMU A Plastic Hilti HIT-SC Screen must be used