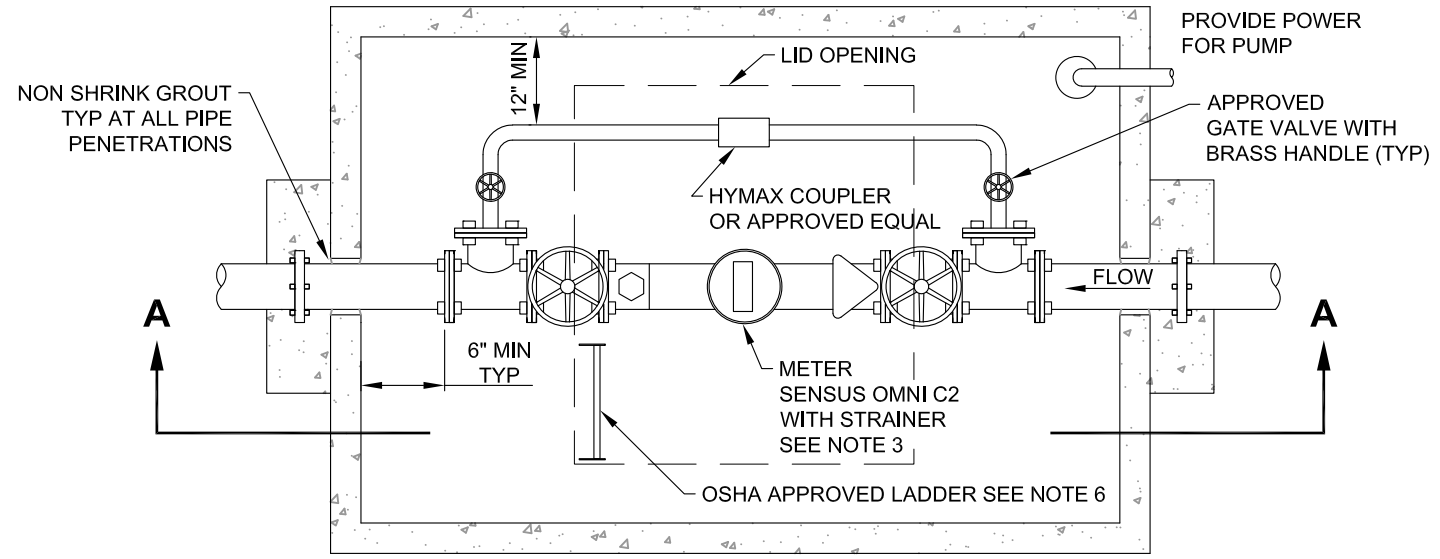

PLAN VIEW

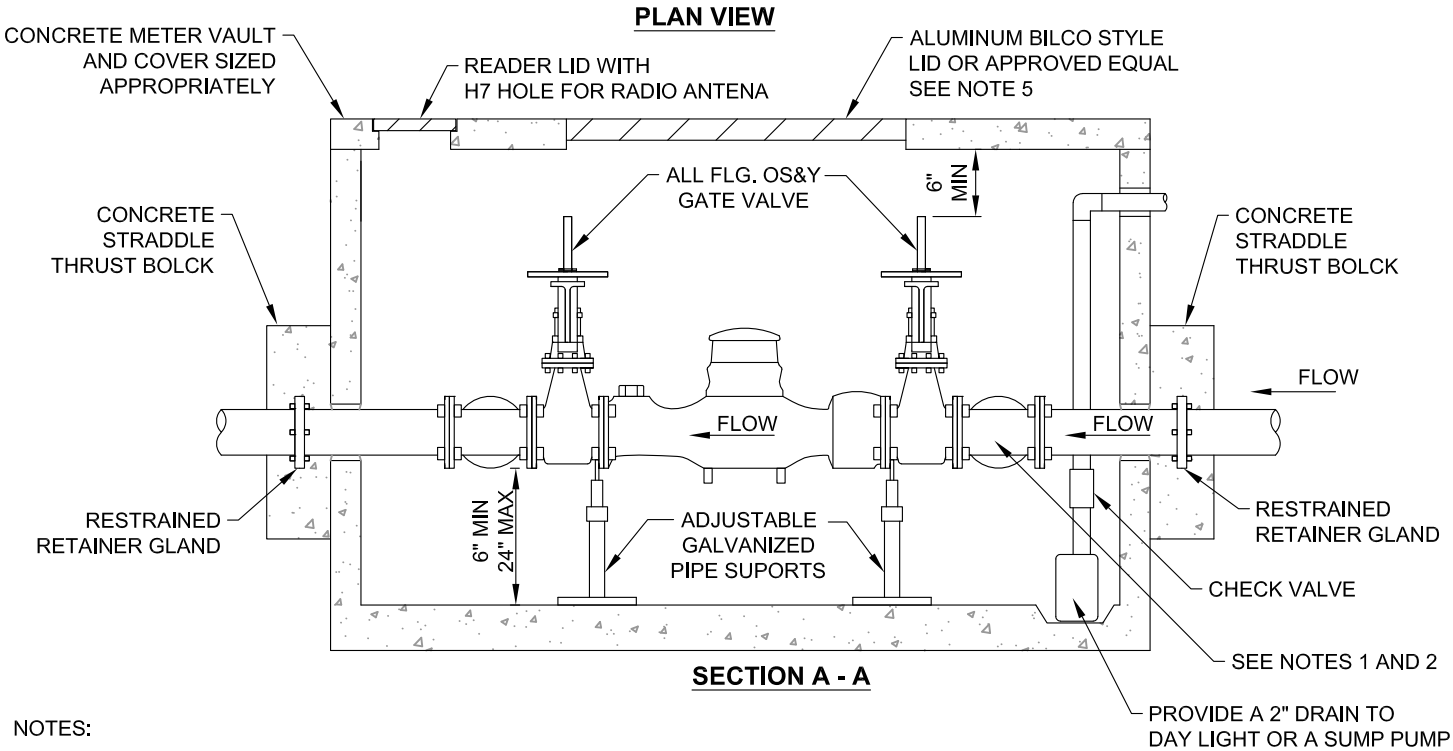

SECTION A - A

NOTES:

1. METERS 4" AND SMALLER REQUIRE A 2" BRASS BY-PASS ASSEMBLY. BY-PASS WILL BE ATTACHED TO THE FLANGE TEE BY A 2" I.P. TAP BLIND FLANGE.

2. METERS LARGER THAN 4" WILL REQUIRE A DUCTILE IRON BY-PASS ONE SIZE SMALLER THAN THE METER SIZE. NO REDUCERS WILL BE ALLOWED IN THE BY-PASS ASSEMBLY.

3. METER SHALL BE SENSUS OMNI C2 EQUIPPED WITH A SENSUS TR/PL REGISTER IN 100's OF CUBIC FEET. CITY CREWS TO PROVIDE AND INSTALL M X U TRANSMITTER.

4. THE LID OPENING SHALL EXTEND A MINIMUM OF 3" ON BOTH ENDS OF THE METER, THE LID OPENING SHALL BE CENTERED OVER THE METER

5. LID SHALL BE EQUIPED WITH THE FOLLOWING: a) ALUMINUM CONSTRUCTION, b) DOUBLE DOOR OPENING, c) ONE-HAND OPEN OPERATION WITH ENCLOSED SPRING ASSIST, d) LOCK OPEN AT 90°, e) LOCKABLE POSITIVE LATCH MECHANISM. TRAFFIC AREAS WILL REQUIRE AN H20 TRAFFIC RATED LID. LANDSCAPE AREAS REQUIRE A LID THAT WILL SUIPORT EXPECTED FOOT TRAFFIC 300 PSF MIN.

6. LADDER SHALL BE EQUIPED WITH ABOVE GRADE EXTENSION ASSEMBLY.

CITY OF CORVALLIS

ENGINEERING DIVISION

DOMESTIC WATER METER
3" OR LARGER
WITH BY-PASS

DATE: JANUARY 2020	SCALE: NONE	STANDARD DETAIL No.
APPROVED:		307