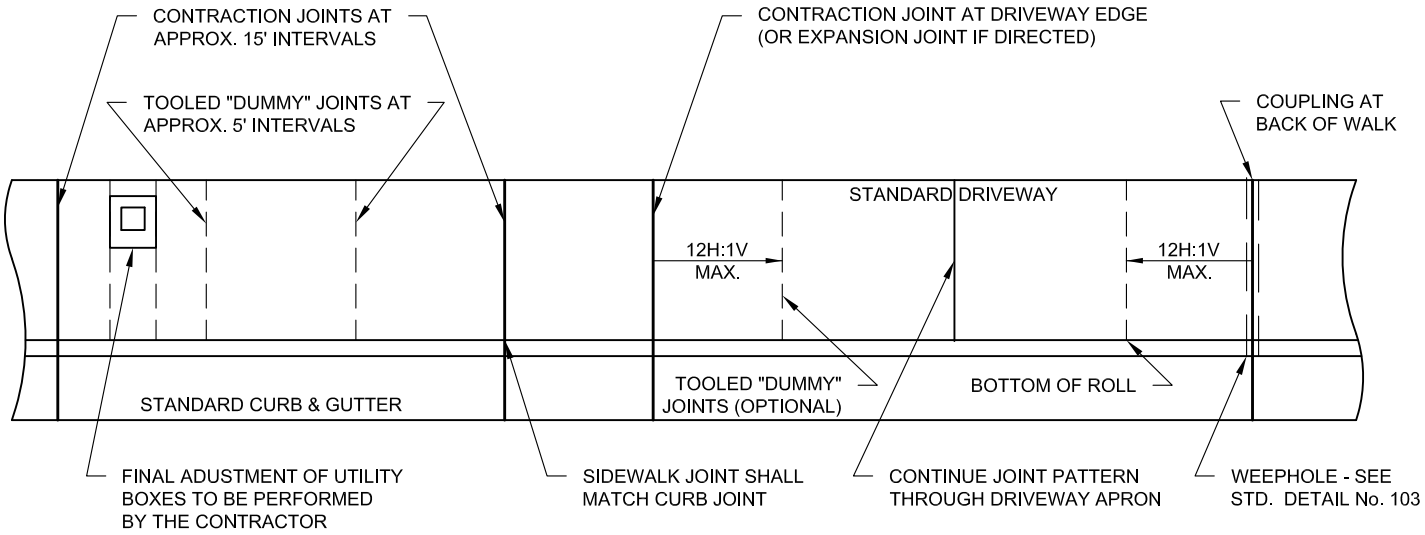

TYPICAL PLAN VIEW

APPLIES TO BOTH CURBSIDE AND SETBACK SIDEWALKS

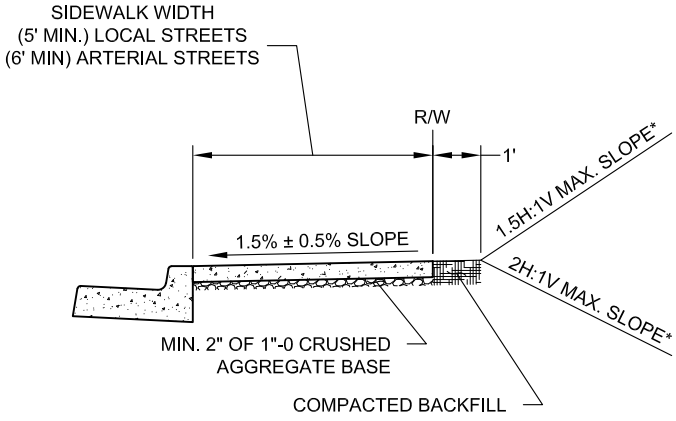

TYPICAL CURBSIDE SIDEWALK CROSS SECTION

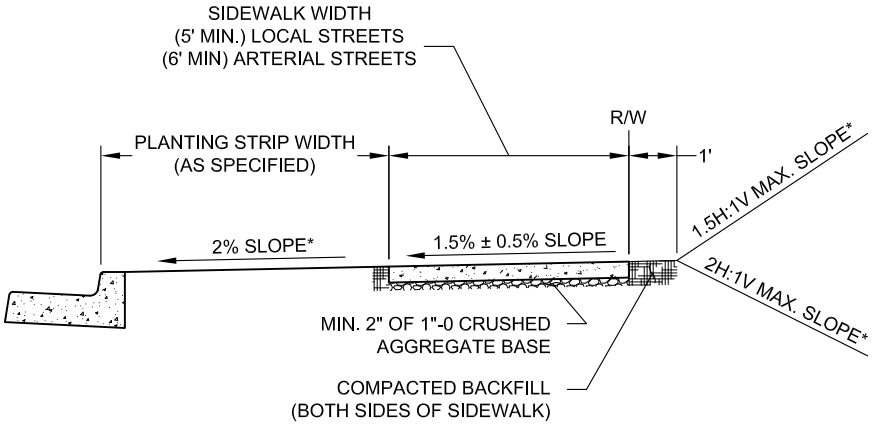

TYPICAL SETBACK SIDEWALK CROSS SECTION

NOTES:

1. SIDEWALKS SHALL BE LOCATED TO PROVIDE A 6-FOOT PLANTING STRIP ON LOCAL AND LOCAL COLLECTOR STREETS, AND A 12-FOOT PLANTING STRIP ON NEIGHBORHOOD COLLECTOR, COLLECTOR, AND ARTERIAL STREETS. WHERE INADEQUATE ROW EXISTS, A REDUCTION IN PLANTING STRIP WIDTH MAY BE ALLOWED WITH PRIOR APPROVAL OF THE ENGINEER.
2. STANDARD SIDEWALK CROSS SLOPE SHALL BE 1.5% ± 0.5%. WHEN THE LOT IS BELOW THE TOP OF THE CURB AND SLOPES AWAY FROM THE CURB, A MINUS 1.5% ± 0.5% SLOPE MAY BE REQUIRED, AS DIRECTED BY THE ENGINEER.
3. CONCRETE DEPTH FOR STANDARD SIDEWALKS SHALL BE NOMINAL 4" MIN. SINGLE FAMILY RESIDENTIAL DRIVEWAY SECTIONS INCLUDING SIDEWALKS THROUGH DRIVEWAYS SHALL BE NOMINAL 6" MIN. ALL OTHER DRIVEWAY SECTIONS SHALL BE NOMINAL 8" MIN. ALL CONCRETE SHALL BE PLACED OVER 2" MIN. CRUSHED AGGREGATE BASE.
4. CONTRACTION JOINTS SHALL BE INSTALLED AT APPROX. INTERVALS OF 15 FEET BY CUTTING A MIN. 1/3 OF THE DEPTH OF THE CONCRETE BUT NOT MORE THAN 1/2. "DUMMY" JOINTS SHALL BE INSTALLED AT APPROX. INTERVALS OF 5 FEET.
5. "DUMMY" JOINTS MAY BE CUT AS STANDARD WEAKENED PLANE CONTRACTION JOINTS IF THE CONTRACTOR SO ELECTS, OR TOOLED WITH A 1/4" RADIUS.
6. THE AREA BEHIND THE SIDEWALK IS TO BE BACKFILLED WITH COMPACTED BACKFILL AS SHOWN ON THE PLAN AND AS DIRECTED. THE BACKFILL SHALL APPLY TO BOTH SIDES OF THE SIDEWALK ON A SETBACK SIDEWALK.

* UNLESS APPROVED OR DIRECTED OTHERWISE BY THE ENGINEER.

CITY OF CORVALLIS ENGINEERING DIVISION		
STANDARD SIDEWALK		
DATE: JANUARY 2020	SCALE: NONE	STANDARD DETAIL No.
APPROVED:		106