City of Corvallis

Jan 2007

CORVALLIS

ENHANCING COMMUNITY LIVABILITY

Biosolids Management Plan

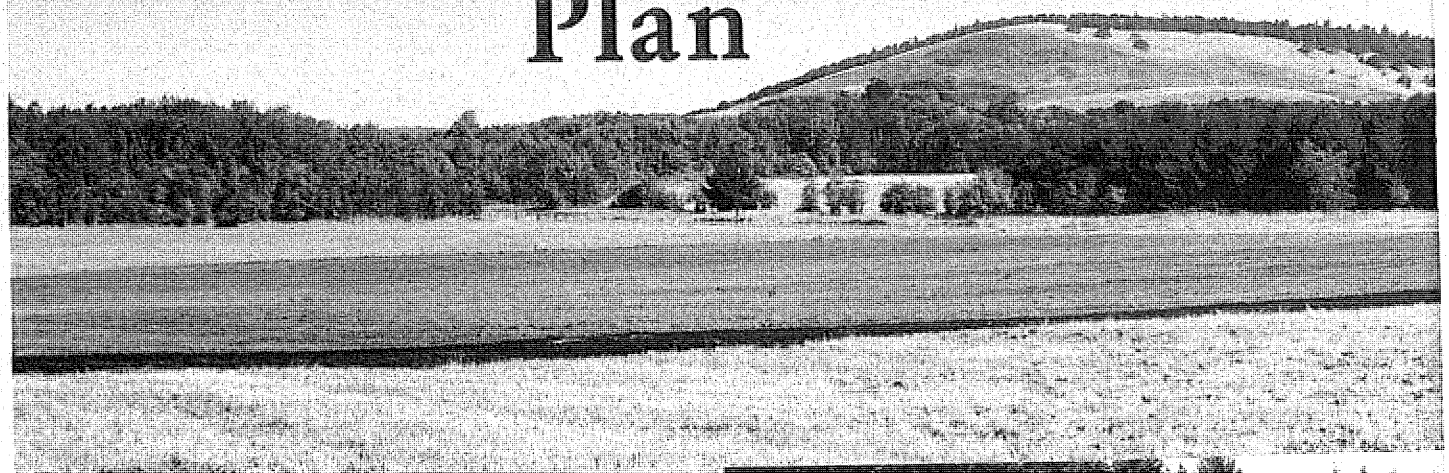

TABLE OF CONTENTS

LIST OF FIGURES ii
LIST OF TABLES ii

EXECUTIVE SUMMARY 1

INTRODUCTION 2

FACILITY DESCRIPTION 3
- Liquid Flowstream 3
- Solids Processing 3
- Septage 4
- Leachate 4
- Pre-Treatment Program 6

SOLIDS TREATMENT PROCESSES 7
- Vector Attraction Reduction 7
- Pathogen Reduction 8

FACULTATIVE TREATMENT AND STORAGE 8

CONTINGENCY PLANNING 9
- Process Failure 9
- Spill Control 9

BIOSOLIDS CHARACTERISTICS 9

REPORTING 11

BIOSOLIDS UTILIZATION PROGRAM 11
- Transportation and Application 11
- Site Selection and Inventory 11
- Application Rates 22
- Soil Sampling and Testing 23

FUTURE BIOSOLIDS PROGRAM ENHANCEMENTS 23

REFERENCES 24

APPENDIX A 2006 Annual Report
APPENDIX B Site Authorization Letters
APPENDIX C DEQ Biosolids Management Rules And Guidance
APPENDIX D OSU Extension Publication: "Fertilizing With Biosolids"
APPENDIX E Glossary

Updated: January 2011

LIST OF FIGURES

No.	Title	Page no.
1	Process Flow Schematic	5
2	Site Layout	5a
3	Vicinity Map	12
4A	Detailed Site Map – Airport	13
4B	Detailed Site Map – Anderson	14
4C	Detailed Site Map – Bressler 100	15
4D	Detailed Site Map – Gray	16
4E	Detailed Site Map – OSU	17
4F	Detailed Site Map – Sanders 30	18
4G	Detailed Site Map – Corvallis Dedicated Site	19
4H	Detailed Site Map – Pimm 101	20

LIST OF TABLES

No.	Title	Page no.
1	Corvallis WWRP Biosolids Characteristics	10
2	Land Application Sites	21
3	Maximum Biosolids Application Rates (Typical)	22

EXECUTIVE SUMMARY

The City of Corvallis Wastewater Reclamation Plant (WWRP) operates a biosolids land application program in the local agricultural community. Biosolids are treated at the WWRP through anaerobic digestion then stored for several months in a facultative lagoon. During storage, solids undergo further pathogen reduction and stabilization. In a typical year, lagoon solids are harvested beginning in May when approved land application sites are accessible. Land application generally runs through September. For the balance of the year solids are stored in the lagoon at the WWRP.

Approximately 1,500 acres have been approved by the Oregon Department of Environmental Quality (DEQ) for biosolids application by the City of Corvallis and additional approvals are pending. Many of these farms are within 5 miles of the treatment facility; all are within 10 miles. Crops grown include forage and grass seed.

The Corvallis biosolids program has operated successfully for nearly 20 years, providing a valued source of fertilizer to agricultural cooperators. The product is applied at an agronomic rate of approximately 3 to 4 dry tons (DT)/acre on 100 to 400 acres/year. Since over 1,500 acres have been approved for application, demand for the product exceeds supply.

Lagoon storage at the WWRP lends flexibility to the biosolids program so that delivery can be made at times when growers need it the most and local field concentrations are favorable. The lagoon also provides additional stabilization (odor) and pathogen reduction. Monitoring for the past year indicated that Corvallis biosolids came close to qualifying as Class A (low fecal coliform) product. Trace metals concentrations are also low due to an effective industrial pretreatment and source control program that has been implemented by city staff.

Wastewater Reclamation Plant staff have worked diligently to develop and maintain the biosolids program consistent with State and Federal standards, and look forward to continued cooperation with the agricultural community. This Management Plan provides basic information about how the program is operated as well as monitoring and testing data to document quality of the product.

INTRODUCTION

Biosolids consist of a semi-solid or liquid residue generated as the end product of biological treatment processes at the WWRP facility. They contain organic matter and nutrients that are beneficial for soil, crop, and livestock productivity. As such they are commonly used as a fertilizer and soil amendment.

Biosolids are regulated by both the U.S. Environmental Protection Agency (EPA) and Oregon Department of Environmental Quality (DEQ) to ensure that quality standards are met. Standards cover trace metal concentrations, pathogen content, odor potential, and basic operational practices. Biosolids produced at the Corvallis Wastewater Reclamation Plant (WWRP), for example, can only be applied to approved farm sites and at controlled rates consistent with crop needs. When managed in this way, biosolids land application provides beneficial reuse or recycling of the nutrients and organic matter. This is one of the ways that treatment plant staff and the city contribute to a better environment for Oregon.

Beneficial reuse of biosolids has long been preferred over historical disposal practices such as incineration or landfilling. Land application practices are encouraged as an alternative to disposal by state and federal regulatory authorities. In Oregon, 99 percent of biosolids produced are recycled on farmland in this way. Recent EPA and DEQ rule making and risk assessments have added credibility and certainty to the concept. Numerous publications from EPA and academic institutions like Oregon State University (OSU) provide valuable information regarding biosolids management practices. A reference list is provided at the end of this report, and a recent OSU bulletin titled "Fertilizing with Biosolids" is included as Appendix D.

This Management Plan outlines treatment practices, monitoring, and methods of operation for the biosolids program. The plan was originally developed in 1980 when many solids handling improvements were designed for the Wastewater Reclamation Plant. The most recent update to the plan was in 2006. The plan is being updated at this time in conjunction with the city's National Pollutant Discharge Elimination System (NPDES) wastewater discharge permit renewal and to address recent modifications in regulatory policy.

FACILITY DESCRIPTION

Liquid Flowstream

The liquid treatment process at the City of Corvallis WWRP is divided into two trains, the WWRP and the CSO plants. The WWRP is designed for an average dry weather flow of 9.7 million gallons per day (mgd). The peak design capacity of the WWRP is 28 mgd. Influent plant flow is pumped by four raw sewage pumps and split into two process trains that each consist of a mechanically cleaned bar screen, a parshall flume for flow measurement, an aerated grit chamber and a rectangular primary sedimentation tank. Primary effluent is conveyed to the two trickling filters and the two aeration basins for secondary treatment. Both of the aeration basins are equipped with fine bubble diffusers and mechanical mixers. Mixed liquor from the aeration basins is conveyed to two secondary clarifiers, and the secondary effluent is disinfected in a single chlorine contact tank. Final effluent gravity flows to the Willamette River under normal conditions and is pumped during higher river levels.

The combined sewer overflow (CSO) has an 85 mgd influent pumpstation with a wet weather treatment capacity of 47 mgd. Influent cso plant flow is pumped by seven submersible sewage pumps and split into two trains that each consist of a mechanically cleaned barscreen, magmeter for flow measurement, aerated grit chamber, chlorine injection, primary sedimentation and dechlorination injection. In addition, a 5 million gallon (MG) lagoon is available for storage of wet weather flow rates exceeds the peak wet weather treatment capacity of 47 mgd. A process flow schematic is provided in Figure 1. The site layout is shown in Figure 2.

Solids Processing

Solids produced during the liquid treatment process are stabilized through anaerobic digestion. A portion of the waste solids generated from the trickling filters and activated sludge process are returned to the gravity thickners where they are combined with raw sludge and thickened. The combined thickened sludge is conveyed to the primary digester, which is mechanically mixed using pumped recirculation. The sludge is heated to 35.6 degrees C for approximately 30 days, and the volatile solids reduction during digestion is approximately 60 percent (see Appendix A).

Septage

The City of Corvallis WWRP receives minor amounts of septage and other sanitary waste generated in the region that are trucked or hauled to the plant. Septic haulers are required by DEQ to secure an approved disposal site. All dischargers of trucked and hauled waste must apply for approval prior to discharging at the plant, and the applicable procedures for a new service discharger must be followed. Domestic septage dischargers are issued a general notification letter and are required to provide a manifest with each load and a certification statement confirming that no industrial waste is being disposed of. Mobile carpet cleaning operations must follow the same requirements as the domestic septage dischargers and certify that they are only discharging carpet-cleaning residuals. Disposal of any other types of trucked or hauled industrial waste will be considered on a case by case basis by the city. The city will not accept any trucked or hauled hazardous waste under any circumstance.

Leachate

The City of Corvallis WWRP receives leachate from Coffin Butte landfill. During wet weather and prior to the summer irrigation season the landfill leachate storage lagoon may reach capacity. The City recognizes this situation and has agreed to treat leachate during such times to avoid any environmental impacts. The discharge of leachate to the WWRP is permitted and regulated by the City's industrial waste management staff. The landfill must apply for approval prior to discharging at the plant.

City of Corvallis
Wastewater Reclamation Plant
1304 N.E. Second Street

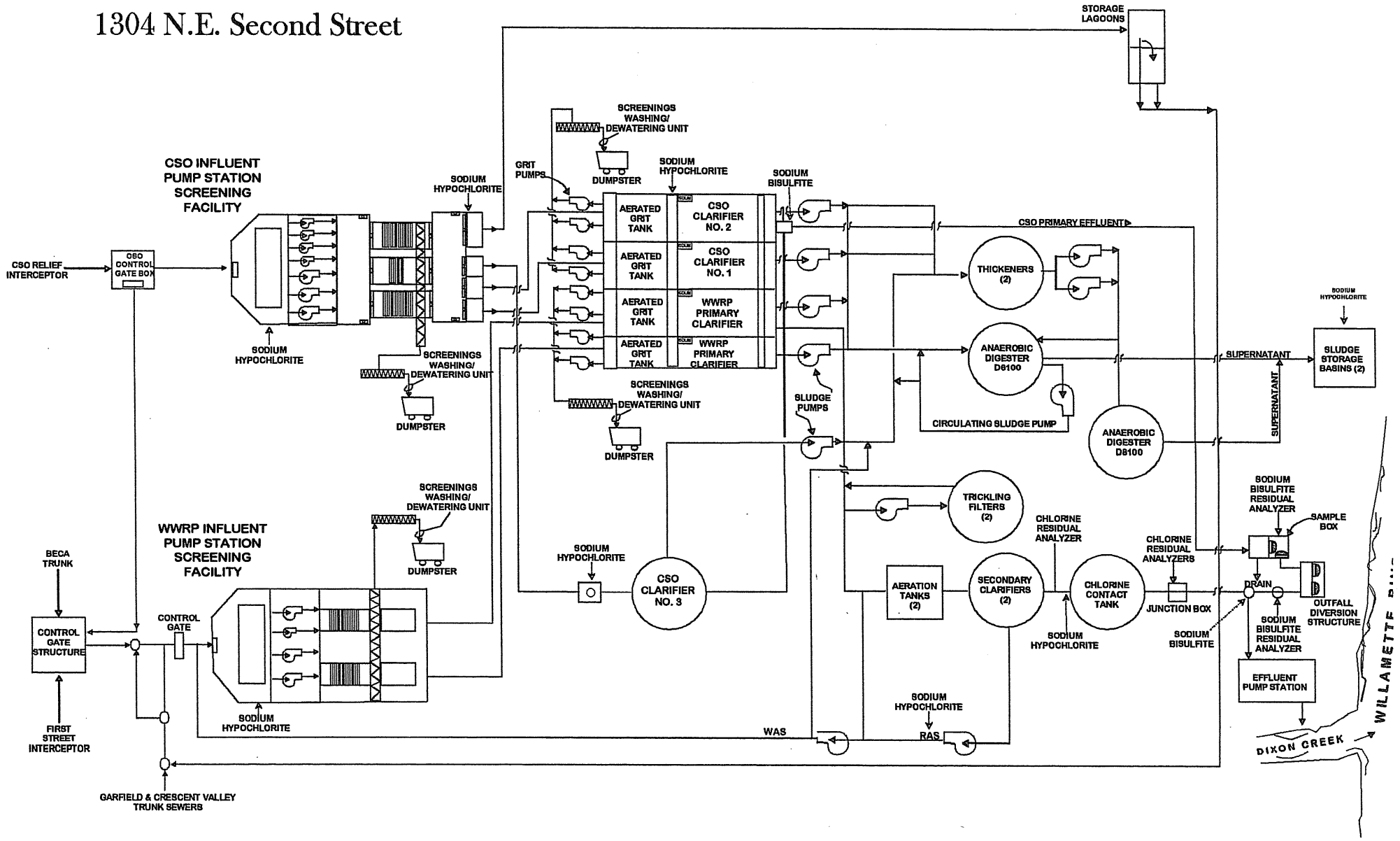

FIGURE 1

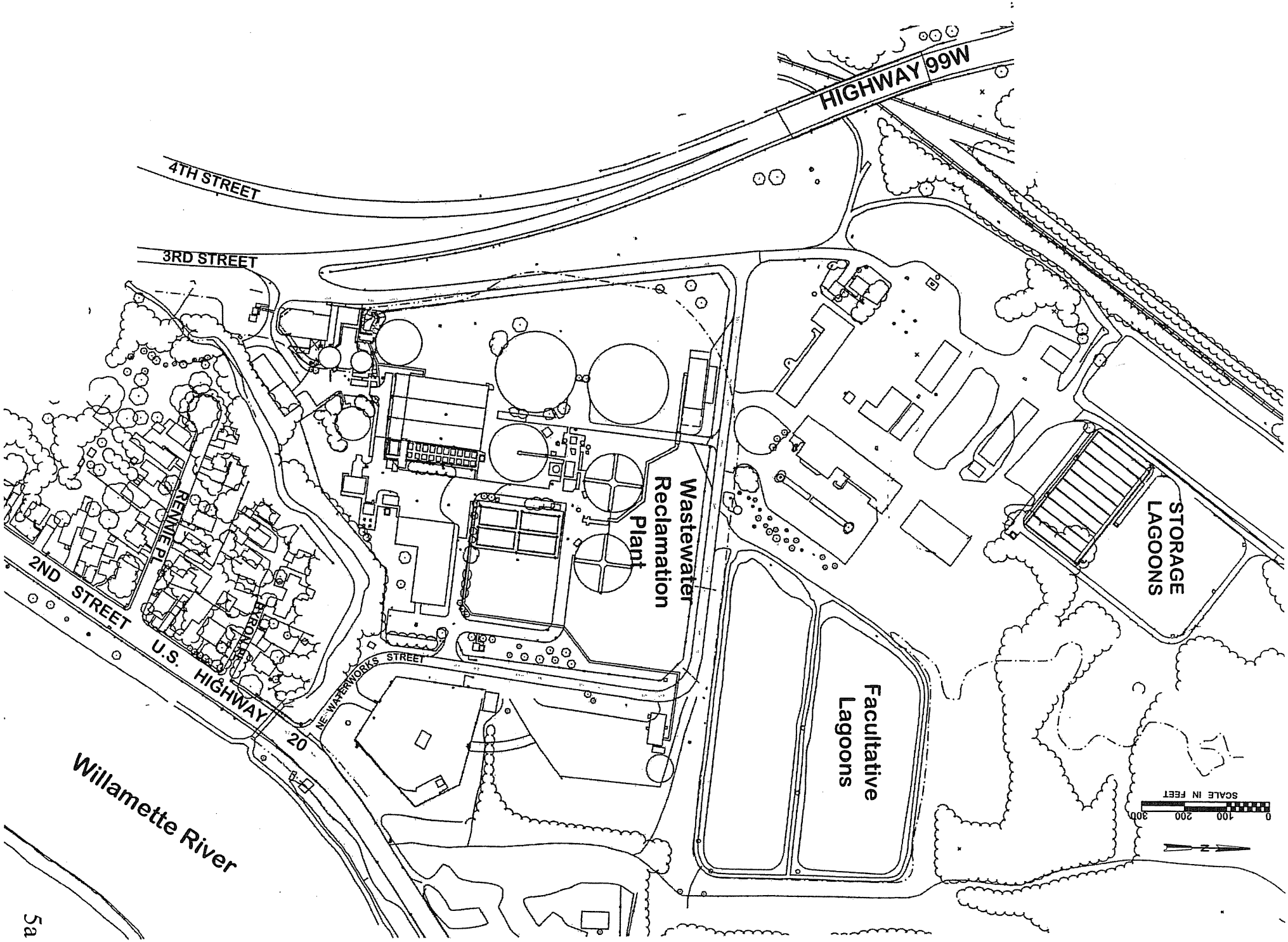
HIGHWAY 99W
4TH STREET
3RD STREET
STORAGE LAGOONS
Wastewater Reclamation Plant
Facultative Lagoons
RENNIE PL
BRONER
NE WATERWORKS STREET
2ND STREET
U.S. HIGHWAY 20
Willamette River
SCALE IN FEET
0
100
200
300

FIGURE 2

Pre-Treatment Program

The 1977 amendments to the Clean Water Act required municipalities to develop and implement pretreatment programs to control pollutants from industries discharging to the public sewer. The City of Corvallis implemented its pretreatment program in 1983 after approval by DEQ.

The purpose of the pretreatment program is to prevent the introduction of pollutants into the sewer system in quantities that might:

1. interfere with the operation of the wastewater treatment plant and collection system;

2. pass through the wastewater treatment plant to pollute the Willamette River;

3. contaminate the biosolids produced at the wastewater treatment plant, preventing biosolids use as an agricultural fertilizer; or

4. cause health and safety risks to the public and wastewater treatment system personnel.

In order to fulfill the purpose of the pretreatment program, pollutants from industrial sources are regulated. The regulated pollutants include substances that cause fire or explosion in the sewer system, corrode the sewer system, cause sewer flow obstruction, or adversely affect the operation of the city treatment system.

Wastewater from industries is required to be treated to remove excessive amounts of pollutants before discharge to the city sewer. This pretreated industrial wastewater is regulated by the city's industrial wastewater pretreatment program.

In order to ensure that the industry knows to what levels it must reduce its pollutants, an industrial wastewater discharge permit is issued by the city. The discharge permit specifies the maximum amounts of pollutants that the industry can discharge into the sewer system.

Industries issued discharge permits are required to submit periodic monitoring reports to demonstrate compliance with discharge

limits. The city also collects samples and conducts inspections to verify compliance.

When violations occur, the city responds with an enforcement action. The level of enforcement corresponds to the nature and degree of the violation. Response actions range from a telephone notification to penalties of up to $20,000 per violation per day.

Through the implementation of a comprehensive pretreatment program, the City of Corvallis is committed to working with industry in a cooperative spirit to enhance community livability by protecting the environment and the community's investment in the wastewater treatment system.

SOLIDS TREATMENT PROCESSES

Under the federal Part 503 rules, pathogen and vector attraction reduction for biosolids is required to control product quality and protect public health. Biosolids can be categorized as Class A or Class B, depending on pathogen reduction methods. Class A biosolids require pathogen reduction processes that reduce pathogen levels below specified limits. Class B requirements are less stringent and reduce pathogens to levels that are unlikely to pose a threat to public health as long as management practices are controlled. Pathogen and vector attraction reduction (or stabilization) occur simultaneously at the Corvallis WWRP during anaerobic digestion. Additional pathogen reduction and stabilization occur during the period when biosolids are held in the facultative lagoons.

Vector Attraction Reduction

The purpose of vector attraction reduction processes is to eliminate the transport of pathogens to humans or animals by vector transmission. Vectors can include insects, rodents, and birds. Biosolids that are stabilized to reduce or eliminate vector attraction are also much less likely to produce offensive odor.

The vector attraction reduction requirement of the EPA 503 rule is met by reducing the volatile suspended solids by at least 38 percent [Option 1, 503.33(b)(1)]. The volatile solids reduction during digestion at Corvallis is approximately 60 percent. Additional (but unmeasured) volatile solids loss occurs during lagoon storage. Reducing the volatile solids by at least 38 percent produces a stable product that will not generate offensive odors and attract vectors.

The Corvallis WWRP greatly exceeds requirements for this quality parameter.

Pathogen Reduction

Pathogen reduction requirements of the 503 rule are met by monitoring the digested solids for fecal coliform [Alternative 1, 503.32(b)(2)]. Seven samples are collected each quarter. The geometric mean of the samples must be less than 2 million MPN per gram of dry solids to meet Class B requirements. Corvallis biosolids greatly exceed these requirements (Table 1). These results are a reflection of long digester detention times and additional treatment provided by the facultative storage lagoons. Pathogen reduction requirements are also met through use of a "Process to Significantly Reduce Pathogens," or PSRP [503.32(b)(3)]; anaerobic digestion for >15 days @ 35 degrees C. Site restrictions are practiced when land applying Class B biosolids. These include restrictions for harvesting crops, grazing animals and public contact.

FACULTATIVE TREATMENT AND STORAGE

The City of Corvallis has two facultative solids storage basins (SSB9100 and SSB9200) with an area of 2.2 acres each. The depth of each lagoon is maintained at 15 feet using a supernatant structure that returns supernatant above 15 feet to the headworks. Digested solids are discharged to the lagoons by gravity through a floating line, which results in an even distribution of solids across the bottom of the lagoon. Profiles of the facultative lagoons are performed as needed to determine when to move the floating line. The design loading rate for the lagoons is 20 pounds VS/1,000 sf/day.

Digested solids are discharged to the basins on alternate years. While solids are being fed to one lagoon, solids are being removed from the other. Isolating solids in this way provides maximum pathogen and vector attraction reduction. Solids are removed by a dredge that pumps through a floating line to the bank of the lagoon and then through a fixed line to an above ground storage tank. Circulation is provided in the storage tank to prevent solids from settling.

CONTINGENCY PLANNING

Process Failure

In the event that a spill or illegal discharge of some hazardous substance were to occur, the primary digester would need to be shutdown and cleaned. The accumulated solids would not meet pathogen and vector attraction reduction criteria and would need to be dewatered and disposed of in a landfill. If the hazardous spill killed all the biological organisms in the activated sludge and trickling filter media, those processes would need to be re-seeded with healthy organisms. These are extremely unlikely occurrences and have not occurred at the Corvallis WWRP.

Spill Control

The city is responsible for cleaning up any spills of biosolids that occur while transporting the biosolids to land application sites. Maintenance staff and equipment are available to respond to such an incident. The driver will immediately clean up any biosolids that have spilled. Any spillage that cannot be cleaned up will be covered with dry lime, and the area will be posted where appropriate.

The DEQ Western Region-Salem office (503/378-8240) will be notified within one hour in the event of any spill over 50 gallons or any other threats to the environment that occur. Spills occurring after normal DEQ working hours shall be reported to the Emergency Management Division (800/452-0311) within one hour.

BIOSOLIDS CHARACTERISTICS

Biosolids are drawn from the solids storage basins (SSBs) after nine to ten months of storage for disposal by land application. The solids are sampled for nutrients, metals, and pathogens during the hauling season, which is May through October. The required monitoring frequency depends upon the size of the facility. The City of Corvallis is a facility that produces greater than 290 but less than 1,500 metric tons of solids per year (561) dry metric tons in (2006), which corresponds to a required monitoring frequency of once per quarter (4 times per year).

Table 1 provides the biosolids characteristics that were measured for 2006. The table shows that the city's biosolids meet all pollutant concentration (PC) limits for all of the metals. Metals limits are specified in both the EPA 503 and Oregon DEQ Division 50 biosolids management rules. As long as PC limits are met, tracking long term metals addition to land application sites is not required.

Table 1. Corvallis WWRP Biosolids Characteristics

Parameter	2006					503 PC Limits[2] (metals, mg/kg)
	June	July	August	August	Mean[1]	
TS, %	6.6	8.4	7.3	7.8	7.5	
VS, %	51.0	48.3	54.8	51.2	51.3	
TKN, %	4.26	1.95	4.31	4.36	3.72	
NH_4-N, %	0.910	0.954	1.360	1.530	1.188	
NO_3-N, %	0.0001	0.0001	0.0007	0.0012	0.0005	
P, %	1.430	0.419	0.117	0.161	0.532	
K, %	0.271	0.295	0.245	0.263	0.268	
Ag, mg/kg	39.8	34.8	36.4	41.3	38.1	
As, mg/kg	4.2	6.3	6.3	6.4	5.8	41
Cd, mg/kg	3.1	3.4	3.1	2.7	3.1	39
Cr, mg/kg	53	59	50	52	53.5	
Cu, mg/kg	595	550	571	514	557.5	1500
Pb, mg/kg	51	57	46	46	50	300
Hg, mg/kg	2.38	0.61	0.68	2.5	1.54	17
Mo, mg/kg	8.9	6.9	7.8	10.1	8.4	75
Ni, mg/kg	28	32	26	27	28.2	420
Se, mg/kg	11.3	10.0	8.0	7.6	9.2	36
Zn, mg/kg	1060	1030	1070	1070	1058	2800
Fecal coliform, MPN/g[3]	21	7	6	7	10	

[1] All values are arithmetic means except fecal coliform, which is a geometric mean.
[2] PC Limits refers to Pollutant Concentration Limits (503.13, Table 3)
[3] Part 503.32 Bulk Class B Pathogen Reduction requirement are based on a geometric mean fecal coliform density of <2,000,000 fecal coliform per gram.

REPORTING

The city is required to submit an annual solids handling report to DEQ and the EPA by February 19 of the year following the calendar reporting year. The report includes an overall description of the solids handling process from generation to application, the total annual solids production, a description of the pollutant monitoring requirements and results, and descriptions of the vector attraction and pathogen reduction processes. An information and application report and pollutant loading summary for each site is also included. In addition, EPA requires that the agency that produces the biosolids provide certification that vector attraction/pathogen reduction requirements are being met. They also require certification by the applier at each site that management practices and site restrictions for Class B biosolids are being met. The annual report for 2006 is included for reference (Appendix A).

BIOSOLIDS UTILIZATION PROGRAM

Transportation and Application

Biosolids are pumped from the above ground storage tank to tank trucks using a recirculating pump. The city owns two 6,000 gallon tank trucks to transport biosolids and to apply the biosolids directly to the site. The trucks are equipped with a splash plate attached to the back of the tank. An irrigation system can be used to surface apply biosolids, but it is only used if fields cannot support truck traffic. It has only been used once in the last ten years. If drivers employed by the city are unable to handle the entire biosolids volume at a given time, hauling contractors are hired and will remain an option if the need arises. Daily records are kept of the quantity of biosolids hauled to each site and the type of application (surface or injection).

Site Selection and Inventory

The City of Corvallis land applies Class B biosolids on DEQ approved sites. Figure 3 is a general location map of the application sites. Table 2 provides a list of the sites and the DEQ authorization date, acreage, and field number for each. Figures 4A, B, C, D, E, F and G are detailed site maps that are kept on file. DEQ site authorization letters are included in Appendix B.

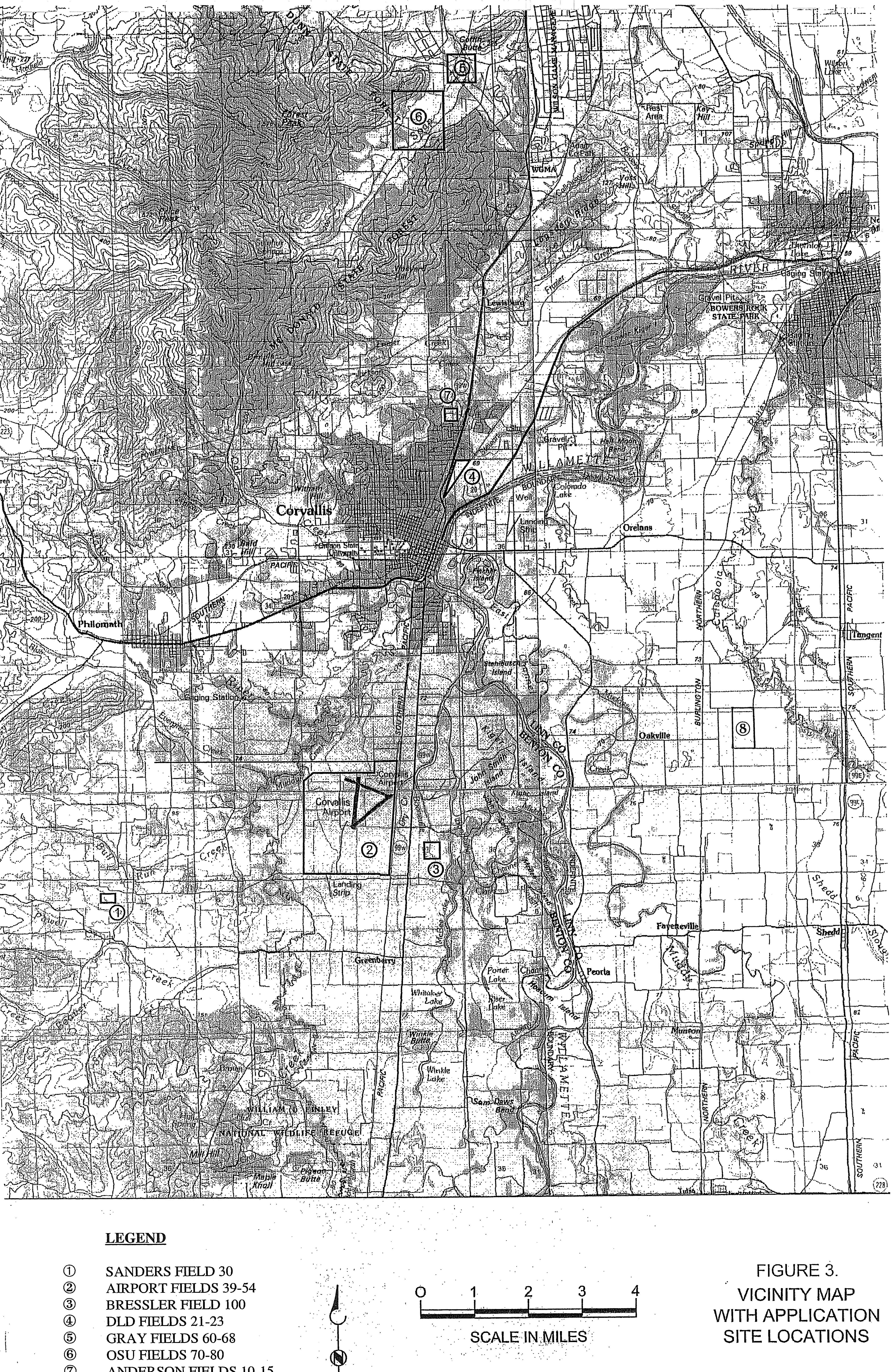

LEGEND

① SANDERS FIELD 30
② AIRPORT FIELDS 39-54
③ BRESSLER FIELD 100
④ DLD FIELDS 21-23
⑤ GRAY FIELDS 60-68
⑥ OSU FIELDS 70-80
⑦ ANDERSON FIELDS 10-15
⑧ PIMM FIELD 101

0 1 2 3 4
SCALE IN MILES

FIGURE 3.
VICINITY MAP
WITH APPLICATION
SITE LOCATIONS

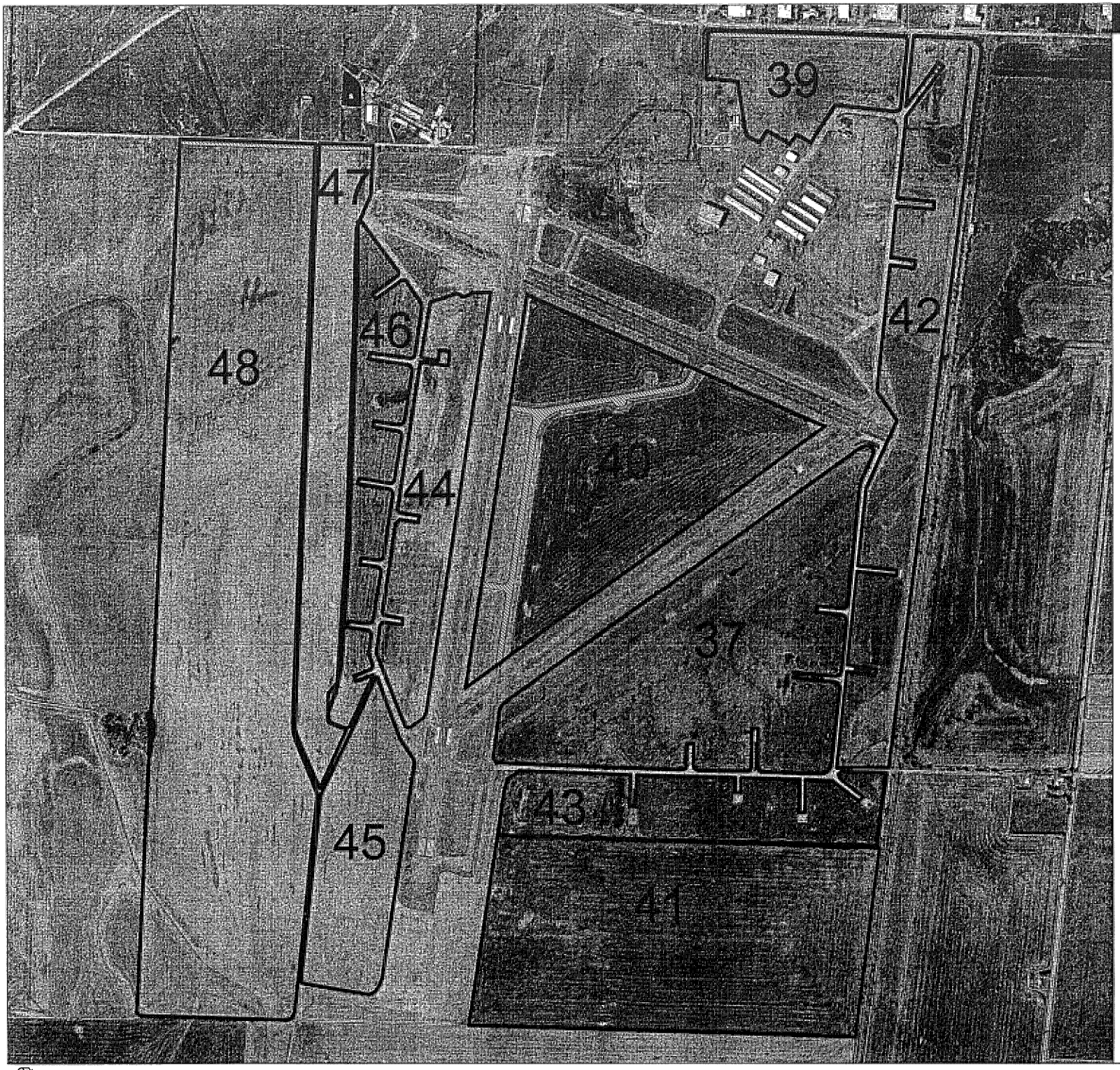

CITY OF CORVALLIS

PUBLIC WORKS

Biosolids Program Site : Airport Soils

Total Area = 911.39 acres
Buffer Area = 9.31 acres
Usable Area = 902.08 acres

N
W E
S

0 500 1000 1500 Feet

1" = 1200 feet

CORVALLIS
ENHANCING COMMUNITY LIVABILITY THROUGH IMPROVED WATER QUALITY

This map is based on digital databases from the City of Corvallis. The City cannot accept any responsibility for errors, omissions, or positional accuracy. There are no warranties, expressed or implied.

Please recycle

FIGURE 4A

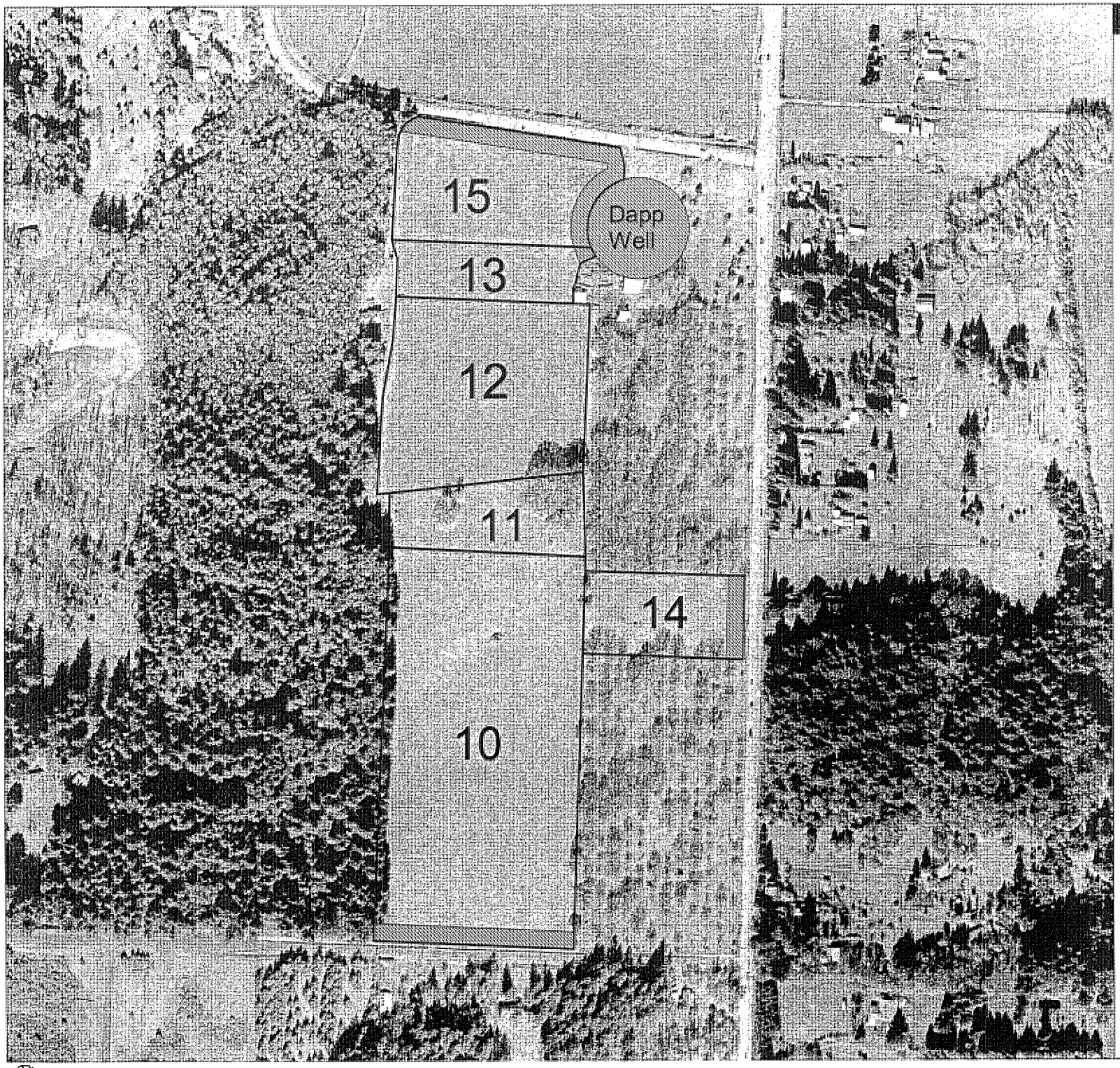

CITY OF CORVALLIS

PUBLIC WORKS

Biosolids Program Site : Anderson Soils

Total Area = 35.46 acres
Buffer Area = 2.10 acres
Usable Area = 33.36 acres

N
W
E
S

0 200 400 600 Feet

1" = 400 feet

CORVALLIS
ENHANCING COMMUNITY LIVABILITY THROUGH IMPROVED WATER QUALITY

This map is based on digital databases from the City of Corvallis. The City cannot accept any responsibility for errors, omissions, or positional accuracy. There are no warranties, expressed or implied.

Please recycle

FIGURE 4B

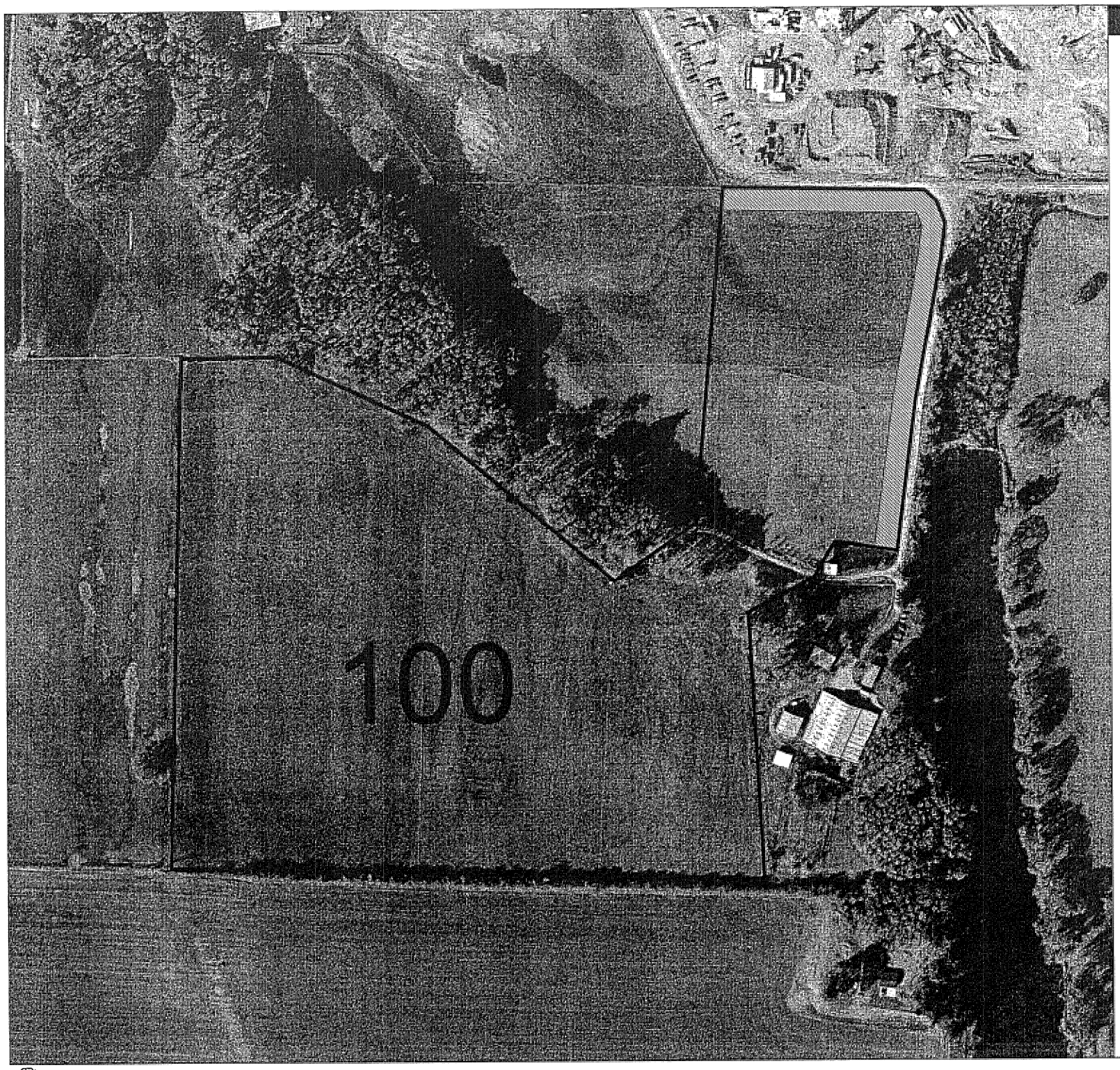

CITY OF CORVALLIS

PUBLIC WORKS

Biosolids Program
Site : Bressler 100

Total Area	=	36.54 acres
Buffer Area	=	1.43 acres
Usable Area	=	35.11 acres

N
W E
S

0 100 200 300 400 Feet

1" = 300 feet

CORVALLIS
ENHANCING COMMUNITY LIVABILITY THROUGH IMPROVED WATER QUALITY

This map is based on digital databases from the City of Corvallis. The City cannot accept any responsibility for errors, omissions, or positional accuracy. There are no warranties, expressed or implied.

Please recycle

FIGURE 4C

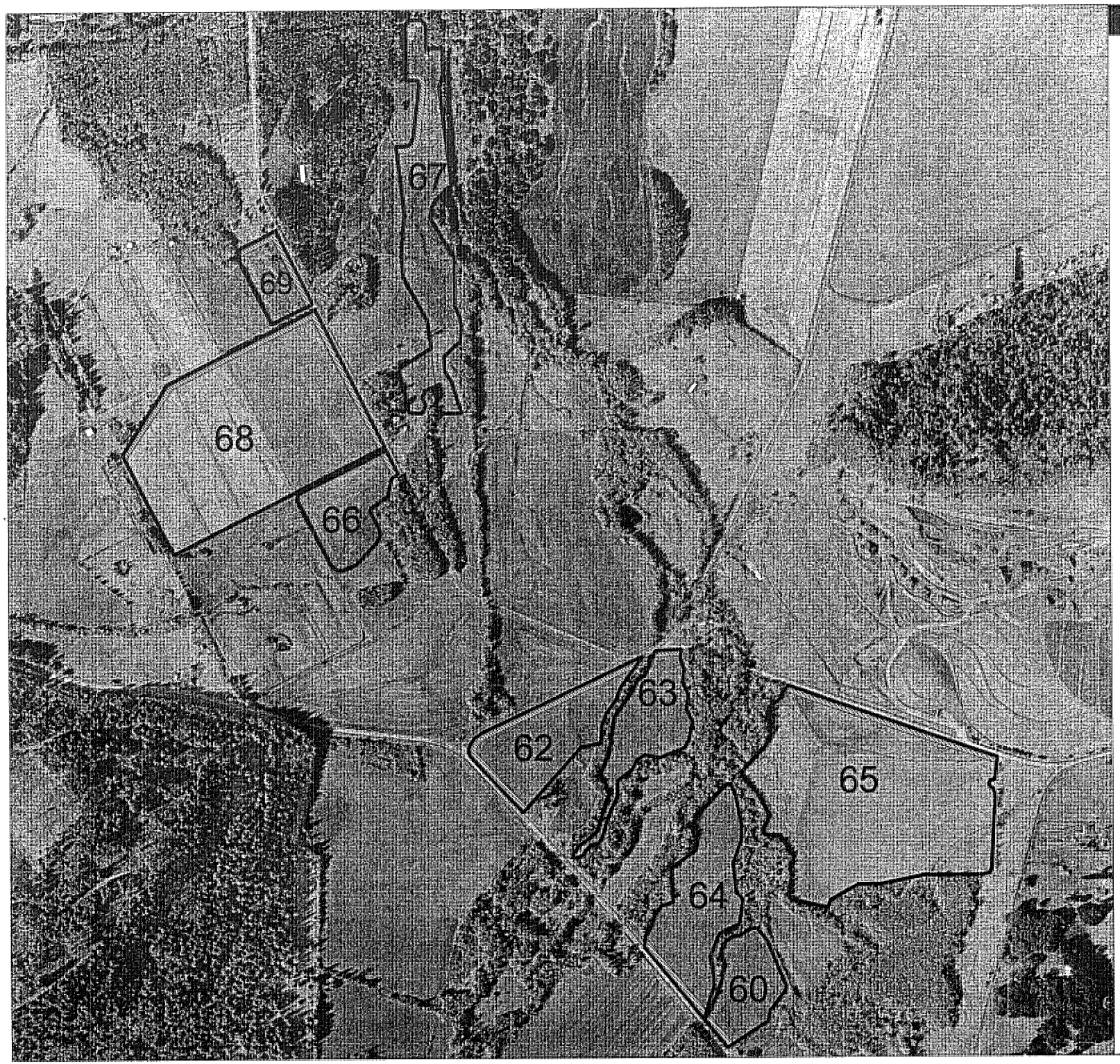

CITY OF CORVALLIS

PUBLIC WORKS

Biosolids Program Site : Gray Soils

Total Area	=	168.41 acres
Buffer Area	=	10.95 acres
Usable Area	=	157.46 acres

N
W E
S

0 500 1000 1500 Feet

1" = 1000 feet

CORVALLIS
ENHANCING COMMUNITY LIVABILITY THROUGH IMPROVED WATER QUALITY

This map is based on digital databases from the City of Corvallis. The City cannot accept any responsibility for errors, omissions, or positional accuracy. There are no warranties, expressed or implied.

Please recycle

FIGURE 4D

CITY OF CORVALLIS

PUBLIC WORKS

Biosolids Program Site : OSU Soils

Total Area	=	253.29 acres
Buffer Area	=	15.73 acres
Usable Area	=	237.56 acres

N
W E
S

0 500 1000 1500 Feet

1" = 1000 feet

CORVALLIS
ENHANCING COMMUNITY LIVABILITY THROUGH IMPROVED WATER QUALITY

This map is based on digital databases from the City of Corvallis. The City cannot accept any responsibility for errors, omissions, or positional accuracy. There are no warranties, expressed or implied.

Please recycle

FIGURE 4E

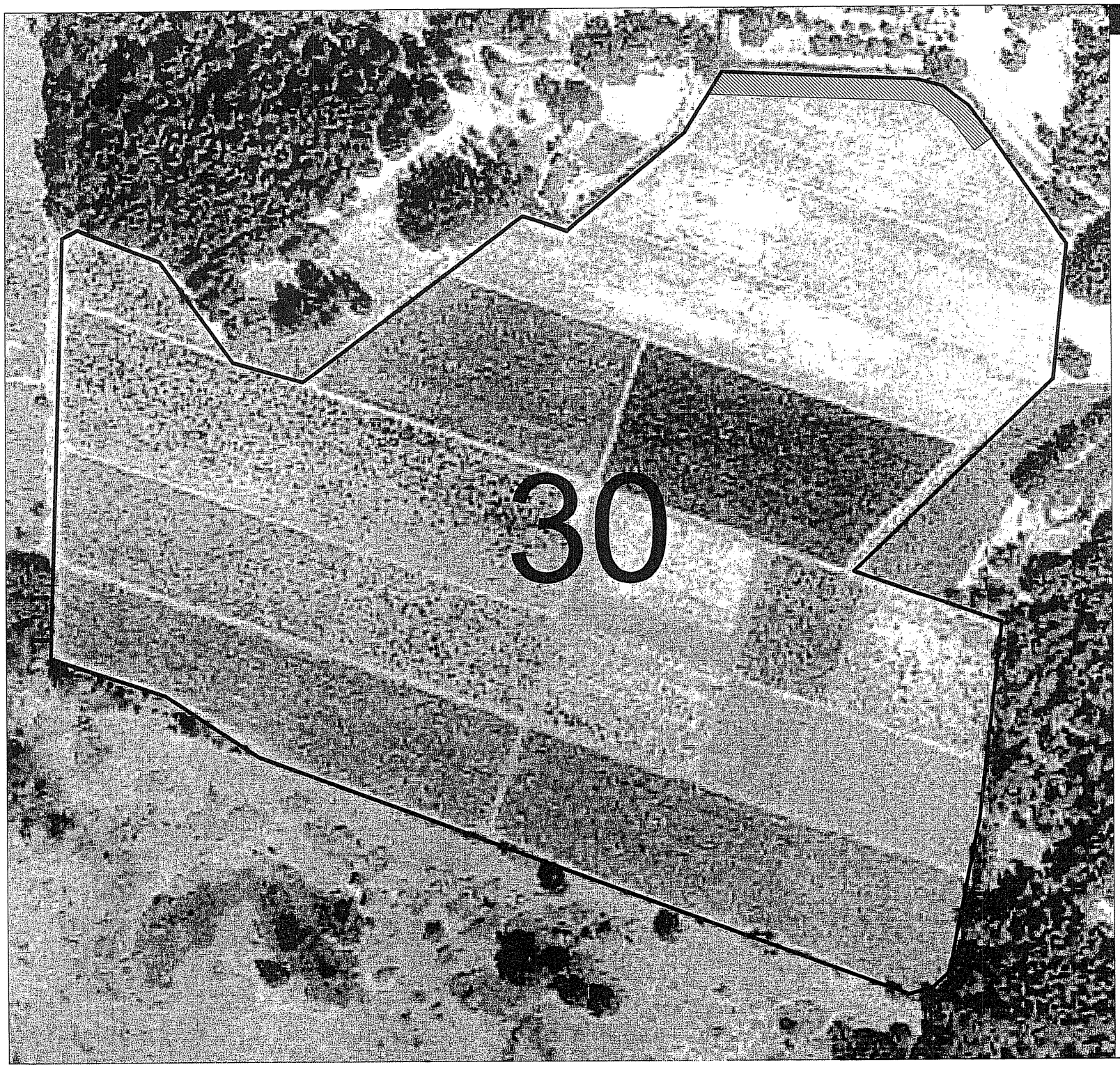

CITY OF CORVALLIS

PUBLIC WORKS

Biosolids Program Site : Sanders 30

Total Area	=	67.86 acres
Buffer Area	=	0.77 acres
Usable Area	=	67.09 acres

N
W E
S

0 100 200 300 400 Feet

1" = 300 feet

CORVALLIS
ENHANCING COMMUNITY LIVABILITY THROUGH IMPROVED WATER QUALITY

This map is based on digital databases from the City of Corvallis. The City cannot accept any responsibility for errors, omissions, or positional accuracy. There are no warranties, expressed or implied.

Please recycle

FIGURE 4F

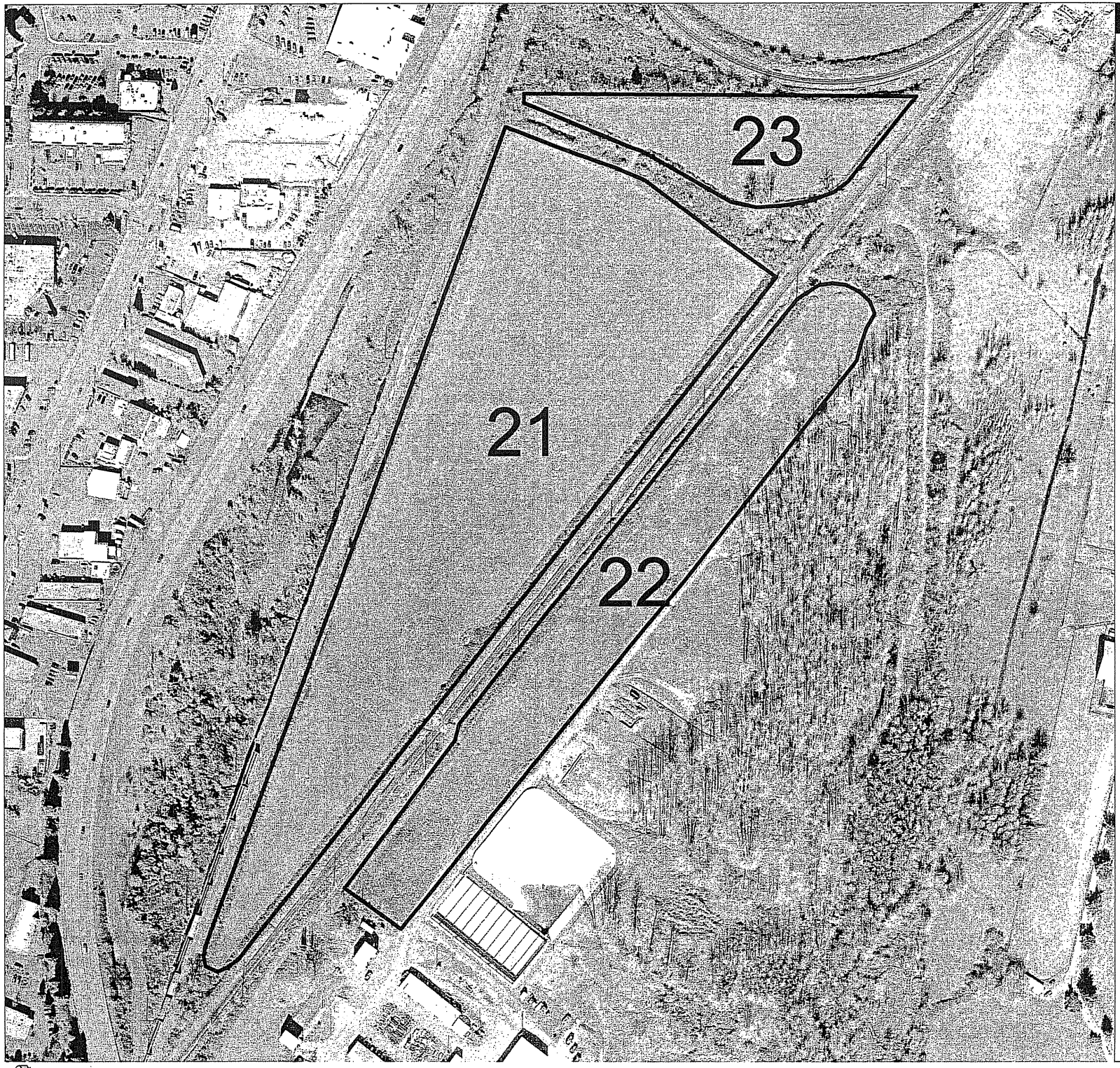

CITY OF CORVALLIS

PUBLIC WORKS

Biosolids Program Site : DLD Soils

Total Area = 27.37 acres
Buffer Area = 0.00 acres
Usable Area = 27.37 acres

N
W E
S

0 100 200 300 400 Feet

1" = 300 feet

CORVALLIS
ENHANCING COMMUNITY LIVABILITY THROUGH IMPROVED WATER QUALITY

This map is based on digital databases from the City of Corvallis. The City cannot accept any responsibility for errors, omissions, or positional accuracy. There are no warranties, expressed or implied.

Please recycle

FIGURE 4C

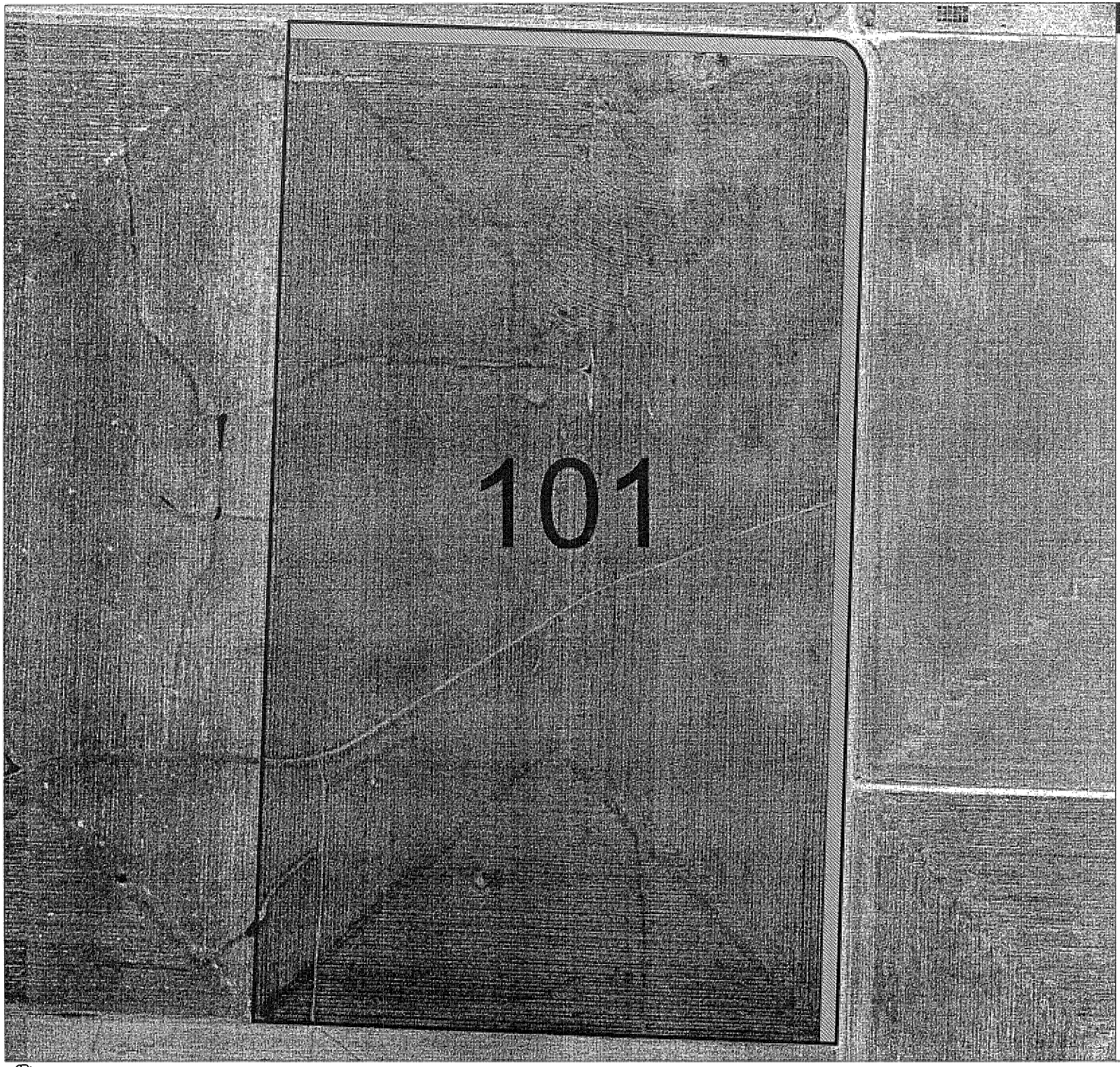

CITY OF CORVALLIS

PUBLIC WORKS

Biosolids Program
Site : Pimm 101

Total Area = 117.13 acres
Buffer Area = 5.28 acres
Usable Area = 111.85 acres

N
W E
S

0 200 400 600 Feet

1" = 400 feet

CORVALLIS
ENHANCING COMMUNITY LIVABILITY THROUGH IMPROVED WATER QUALITY

This map is based on digital databases from the City of Corvallis. The City cannot accept any responsibility for errors, omissions, or positional accuracy. There are no warranties, expressed or implied.

Please recycle

FIGURE 4H

Table 2. Land Application Sites

Site name	DEQ authorization date	Acres	Field Number(s)
Airport	May 1999	902.08	37, 39-48
Anderson	May 1981	33.36	10-15
	Modified January 2011		16
OSU	August 1999	237.92	70,75-78,80
Corvallis Dedicated Site	May 1999	27.37	21-23
Pimm Farm	August 2007	111.85	101
Gray	June 1995	157.46	60, 62-69
Sanders 30	August 1992	67.09	30
Bressler 100	June 1996	35.11	100
Total acres		**1572.24**	

Site approval must be consistent with local land use plans. The following site conditions must be considered when determining the suitability of a site for land application:

- Stability of the geologic formation of the site and the possibility of flooding.
- Minimum depth to permanent groundwater should be 4 feet.
- Topography of the site–liquid sludge should not be applied on slopes greater than 12 percent.

I. Minimum soil rooting depth of 24 inches.

- Proximity to residential areas–a buffer strip shall be provided with the size depending upon the type of application.
- Proximity to well-traveled highways and waterways–a buffer strip shall be provided.

These and other site selection considerations are outlined in DEQ's biosolids management rules (OAR 340 Div. 50), which are provided in Appendix C. An adequate land base is available for current and future operations. Approximately 400 acres are used in a given year. More than three times this amount of land has been authorized by DEQ. Authorization to additional sites owned by OSU is pending. New sites would be in the general vicinity shown on the area map

Application Rates

Based on 2006 nutrient levels, Corvallis biosolids provide 27.2 pounds of nitrogen per dry ton of solids. This assumes a mineralization rate of 30 percent and a 50 percent loss of ammonia due to volatilization. The maximum application rate differs for each site, but typical application rates for different crops are provided in Table 3.

Table 3. Maximum Biosolids Application Rates (Typical)

Crop	N required lb/ac	Biosolids DT/ac[1]	Biosolids gal/ac[1]	Biosolids inches/ac
Grass pasture/grass hay[2]	100	3.7	14,532	0.54
Grass seed	130	4.8	18,892	0.70

[1] At average nutrient and solids concentrations listed for 1998.
[2] Assumes a healthy stand and 5 ton/ac harvest.

Application rates may vary depending on solids concentration and percent TKN and NH_4-N. An example calculation is provided below.

Average biosolids N concentrations (Table 1)

TKN, % 3.72
NH_4-N, % 1.19
NO_3-N, % 0

Available N calculation

% effective inorganic N =
(%NH_4-N)(0.5[1]) + (%NO_3-N) = (1.3%)(0.5) + (0%) = **0.60**

% organic N = (%TKN) – (%NH_4-N) = 3.67 – 1.3 = **2.53**

lbs mineralized organic N/dry ton (DT) biosolids =
(%organic N/100)(mineralization rate/100)(2000 lb/DT) =
(2.37/100)(30[2]/100)(2000) = **15.2 lbs N/DT**

lbs effective inorganic N/DT = (% eff. Inorganic N/100)(2000 lb/DT) =
(0.65/100)(2000) = **12 lbs N/DT**

Total lbs available N/DT = mineralized organic N + effective inorganic N =14.2 + 13 = **27.2 lbs N/DT**

[1] 50 percent loss of NH_4-N due to volatilization
[2] Mineralization rate for lagoon-stored biosolids is 30 percent

For this example, the biosolids application rate for a site requiring 100 lbs N/ac would be (100 lbs N/ac)/(27.2 lbs N/DT), or 3.7 DT/ac, as shown in Table 3.

Additional information on biosolids application rates and nutrient management is provided in the OSU Extension publication included as Appendix D.

Soil Sampling and Testing

Sampling and testing of application site soils is conducted in the event of routine annual application to the same field exceeding 2 out of 3 years. Available N in the soil profile is factored into the agronomic rate calculations such that biosolids application may be reduced to account for carry-over from previous applications.

FUTURE BIOSOLIDS PROGRAM ENHANCEMENTS

The Corvallis WWRP has maintained a successful biosolids land application program for nearly 20 years. Facultative lagoon treatment and storage for biosolids has resulted in the ability to deliver a quality product at times when it is most needed at cooperating farms. Additional farm sites will be added in the near future to provide even greater flexibility in scheduling operations and product delivery. One of the goals of operations staff is to make the product available to a wider user group, within reasonable limits for hauling distance and cost.

Historically, WWRP staff have relied on a computerized management system for calculating application rates and maintaining records. A shift is underway to a more "hands-on" approach to provide greater operator involvement and knowledge of variables such as biosolids nutrient value and crop requirements. Soil samples will be collected at sites that receive frequent biosolids application to help fine tune application rates.

Staff are also bringing the county-wide GIS (graphic information system) into the program as a tool for tracking application sites and record keeping. Aerial photo-based site maps (as represented in previous sections of this report) provide an excellent method for assisting with application site management and monitoring, and the use of the GIS system will continue to be refined.

REFERENCES

National Research Council. 1996. Use of Reclaimed Water and Sludge in Food Crop Production. National Academy Press, Washington, D.C.

USEPA. 1995. A Guide to the Biosolids Risk Assessment for the EPA Part 503 Rule. EPA/832/B-93/005.

USEPA. 1994. A Plain English Guide to the EPA Part 503 Biosolids Rule. EPA/832-R-93/003.

Sullivan, Dan. 1998. Fertilizing with Biosolids. PNW508, Oregon State University, Corvallis.

APPENDIX A

2006 ANNUAL REPORT

CITY OF CORVALLIS
BIOSOLIDS MANAGEMENT PROGRAM

DEQ/EPA ANNUAL REPORT - 2006

I. Background/General

A. Facility: City of Corvallis Wastewater Reclamation Plant
P.O. Box 1083 Corvallis OR 97339
Longitude: 123 deg. 15' Latitude: 44 deg. 34'

NPDES Permit # : 100984, DEQ File 20151
Facility contact : Dan Hanthorn, Wastewater Operations Manager

B. Reporting Period: Calendar year 2006

C. Narrative Description:

1. Sludge generation process: The City of Corvallis operates a secondary treatment plant using both trickling filter and activated sludge processes. In this process a portion of the biological solids generated in the secondary system is wasted to the gravity thickeners where it is combined with raw sludge and thickened. It is then pumped to one of the primary digesters. An average of 30,310 gallons of sludge is pumped daily to the anaerobic digester. The sludge is then heated to 96 deg. F for approximately 26 days prior to discharge to one of two facultative lagoons where the sludge is stored for eight to nine months prior to land application.

- Two headworks structures with mechanically raked bar screens.
- Five primary clarifiers, four rectangular with aerated grit removal and one circular.
- Two standard rate trickling filters.
- Two aeration basins with fine bubble diffusers and mechanical mixers.
- Two circular secondary clarifiers.
- One circular chlorine contact basin.
- Two gravity thickeners.
- Two 800,000 gallon primary digesters, mechanically mixed , hot water heated by dual fuel boilers. Operation is in the mesophilic temperature range.
- Two facultative solids storage basins (2.2 acres each).

Background/General (cont.)

2. Biosolids application process:

Biosolids are pumped from the facultative storage lagoon by a manned dredge to an above ground storage tank. Biosolids are recirculated continuously to prevent solids separation. Trucks load from the storage tank with the recirculating pump. Biosolids are then applied at agronomic rates to approved sites with two 6,000 gallon tank trucks once crops have been harvested and the ground is stable enough to support the trucks. Biosolids application is restricted to dryer months and typically runs between May, 15 and October, 15.

- two 6,000 gallon tank trucks
- one off-road 3,000 gallon injection truck

3. Process Flow Diagram (See attachment A1)

D. Total Annual Production:

1. From Corvallis to sites:

		Metric	U.S
a.	Tons generated:	510	561
b.	Area covered:	45 ha	112 ac

E. Pollutant Monitoring: 40 CFR 503.16

1. Required frequency is four per year based on >290 but < 1500 metric tons applied per 365 day period. Samples are taken during the active season, from May through October. Application of biosolids is regulated by the weather and harvest, and can start as late as August. (See attachment A2)

F. Management Practices: 40 CFR 503.14

1. Biosolids shall not be applied to the land if it is likely to adversely affect a threatened or endangered species listed under section 4 of the Endangered Species Act or its designated critical habitat.

2. Biosolids shall not be applied to agricultural land, forest, a public contact site, or a reclamation site that is flooded, frozen, or snow-covered so that the biosolids enters a wetland or other waters of the United States, as defined in 40 CFR 122.2, except as provided in a permit issued pursuant to section 402 or 404 of the CWA.

Management Practices(cont.)

3. Biosolids shall be applied to agricultural land, forest, a public contact site or a reclamation site at a whole sludge application rate that is equal to or less than the agronomic rate for the biosolids, unless, in the case of a reclamation site, otherwise specified by the permitting authority.

4. A 50-foot setback shall be maintained between biosolids application areas and all highways, public roadways, and property lines.

5. A minimum setback of 200 feet shall be maintained from biosolids application areas and all wells and other water sources.

6. A minimum setback of 50 feet shall be maintained from seasonal drainage ways and 100 feet from Soap Creek.

7. Biosolids shall be applied evenly and thinly in a manner that will prevent ponding and runoff.

8. No biosolids shall be applied, when within the prior 24 hours, 0.25 inches of rain or greater has fallen in the Corvallis area.

9. No food crops for direct human consumption, whose harvested parts are grown below ground, shall be planted on any biosolids amended area for at least 38 months following the last biosolids application.

10. No food crops for direct human consumption, whose harvested parts are grown above ground (e.g., tomatoes) shall be grown on any biosolids amended area for at least 14 months following the last biosolids application.

11. A 30-day fallow period shall follow the application of biosolids prior to grazing livestock or harvesting animal feed crops from the amended area.

12. Public access to field sites shall be restricted for at least 12 months after biosolids application has ceased.

13. In the event an odor problem is reported at any land application site, immediate steps, such as, but not limited to, the addition of liming materials, must be taken to counteract that condition.

14. The City shall maintain daily records for the biosolids application sites. The records shall show where, when, and how many gallons were applied.

CITY OF CORVALLIS
BIOSOLIDS MANAGEMENT PROGRAM

DEQ/EPA ANNUAL REPORT - 2006

I. Vector Attraction Reduction: 40 CFR 503.33

A. Facility City of Corvallis Wastewater Reclamation plant
P.O. box 1083 Corvallis OR 97339
Longitude: 123 deg. 15' Latitude: 44 deg. 34'

NPDES Permit # : 100984, DEQ File 20151
Facility contact : Dan Hanthorn, Wastewater Operations Manager

B. Reporting Period: Calendar year 2006

2. Process Description:

A. Primary digester (2)

- 800,000 gallon capacity each (only one on-line at a time)
- Average volume raw sludge pumped to primary digester; 30,310 gals. @ 78%vs.
- Sludge detention time averaged 26 days
- Digester temperature averaged 96.0 degrees F.
- Digester average pH was 7.5
- The average concentration leaving the digester was 1.9% @ 57% vs.
- The average volatile solids reduction for the digester was 62%.

B. Facultative solids storage basins (2)

- 2.2 acres each
- total depth 15 ft.
- 51% volatile solids (4 per yr)(season average)
- 4.7 % solids removed (season average)
- Nutrient analysis (4 per yr)
- Metals analysis (4 per yr)
- Operation: Solids enter the SSB from the anaerobic digester by gravity through a floating line. This allows the sludge to be discharged below the surface of the water, with the normal wave action on the SSB's, solids are evenly distributed across the bottom. Profiles of the SSB's are preformed on a quarterly basis to determine if the floating line needs to be moved.

Lagoons are alternated every year, feeding one and removing solids from the other. Removal of the solids is done with a floating dredge that pumps through a floating line to the bank and into fixed piping to an above ground storage tank. The storage tank is recirculated to keep the solids in suspension.

3. Alternative 1, 40 CFR 503.33 (b)(1)

Has the mass of volatile solids in the sewage sludge been reduced by at least 38 percent? **Yes**

Frequency: Volatile solids reduction is verified __4__ times per season.

CITY OF CORVALLIS
BIOSOLIDS MANAGEMENT PROGRAM

DEQ/EPA ANNUAL REPORT - 2006

I. Pathogen Reduction: Class B - Alternative 1, 40 CFR 503.32(b)(2)

A. Facility: City of Corvallis Wastewater Reclamation plant
P.O. box 1083 Corvallis OR 97339
Longitude: 123 deg. 15' Latitude: 44 deg. 34'

NPDES Permit # : 100984, DEQ File 20151
Facility contact : Dan Hanthorn, Wastewater Operations Manager

B. Reporting Period: Calendar year 2006

2. Sampling and Analysis:

A. During sampling, were seven samples of biosolids collected for analysis? Yes

B. Was the geometric mean of the density of fecal coliform sample collected less than either (I) 2,000,000 Most Probable Number (MPN) per gram of total solids (dry weight basis) OR (ii) 2,000,000 Colony Forming Units (CFU) per gram of total solids (dry weight basis)? Yes

3.Monitoring Data

Parameter	Allowable level In sludge	Date	Pathogen density Value	Units	Frequency of Analysis	Sample Type	Analytical Technique
Fecal Coliform	$2*10^6$ MPN	6/06/06	21	MPN	4 per season	Grab	SM9221C
		7/25/06	7	MPN			
		8/01/06	6	MPN			
		8/22/06	7	MPN			

4. Site restrictions:
Public access is restricted for one year, crop harvest and grazing are restricted for 30 days, after the final application of biosolids.

City of Corvallis
Wastewater Reclamation Plant
1304 N.E. Second Street

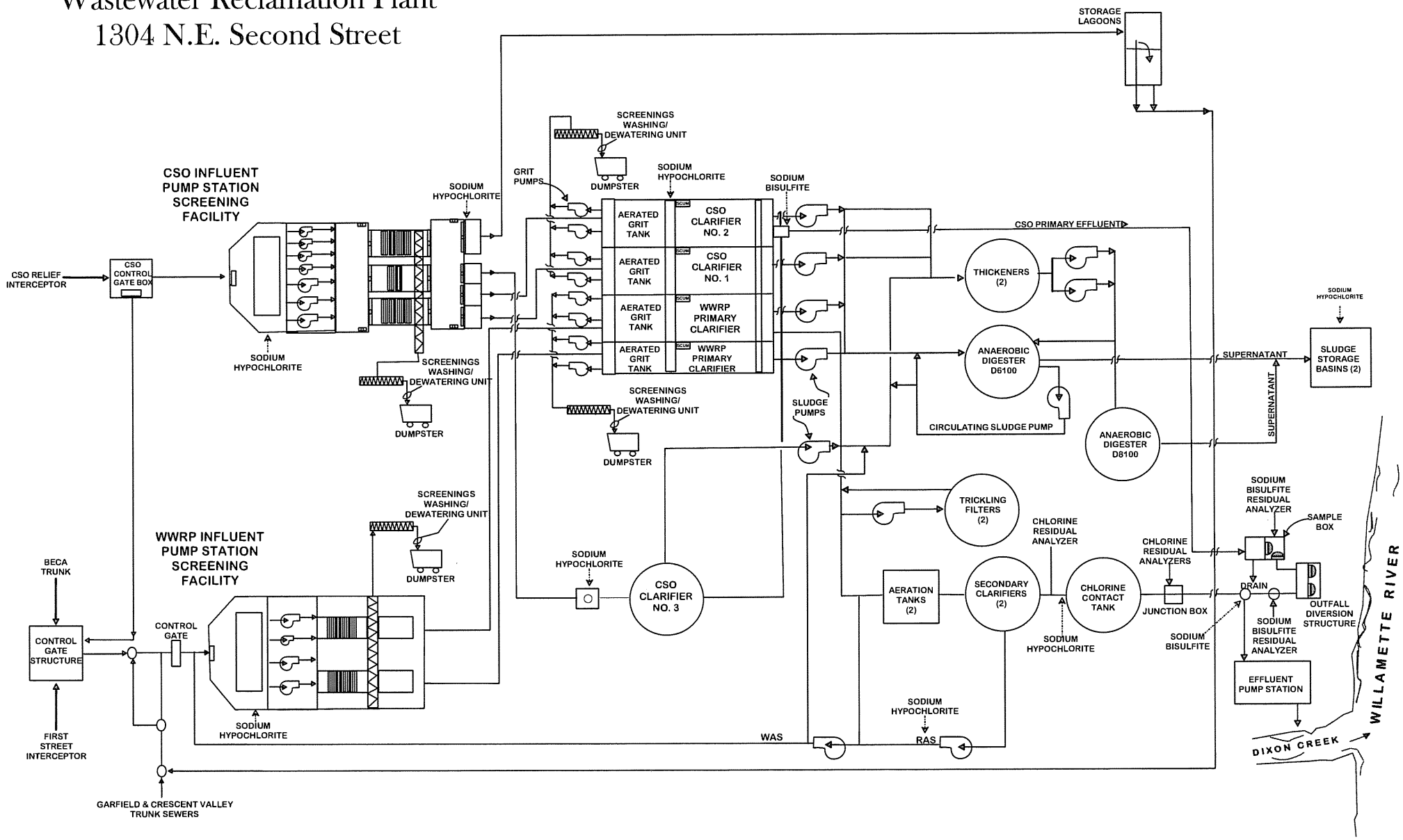

ATTACHMENT A1

CITY OF CORVALLIS WASTEWATER RECLAMATION PLANT
BIOSOLIDS ANALYSIS FOR AGRICULTURAL USE
(SSB 9200 SLUDGE STABILIZATION BASIN)

All values in mg/kg dry weight basis unless otherwise noted

DATE	%TS	%VS	%P	%NH_3-N	%NO_3-N	%TKN-N	Ag	As	Cd	Cr	Cu	Pb	Hg	Mo	Ni	Se	Zn	K
06/06/06	6.60	51.0	1.430	0.910	0.00009	4.26	39.8	4.2	3.10	53	595	51	2.38	8.90	28	11.3	1060	2710
07/25/06	8.40	48.3	0.419	0.954	0.00012	1.95	34.8	6.3	3.40	59	550	57	0.61	6.90	32	10.0	1030	2950
08/01/06	7.30	54.8	0.117	1.360	0.00068	4.31	36.4	6.3	3.10	50	571	46	0.68	7.80	26	8.0	1070	2450
08/22/06	7.80	51.2	0.161	1.530	0.00123	4.36	37.7	6.4	2.70	52	514	46	2.50	10.10	27	7.6	1070	2630

ATTACHMENT A2

MANAGEMENT PRACTICES CERTIFICATION 2006

POTW: City of Corvallis WWRP

Source Name: SSB 9200 - Class B

Source Period: Jan-1-2006 - Dec-31-2006

I certify, under penalty of law, that the management practices in 503.14 and the site restrictions in 503.32(b)(5)(v) have been met. This determination has been made under my direction and supervision in accordance with the system designed to ensure that qualified personnel properly gather and evaluate the information used to determine that the management practices and site restriction requirements have been met. I am aware that there are significant penalties for false certification including the possibility of fine and imprisonment.

Signature : _____ Date : _____

PATHOGEN CERTIFICATION
2006

POTW: City of Corvallis WWRP

Source Name: SSB 9200 - Class B

Source Period: Jan-1-2006 - Dec-31-2006

I certify, under penalty of law, that the Class B pathogen reduction requirement in 503.32(b) Alt (2)(3) has been met. This determination has been made under my direction and supervision in accordance with the system designed to ensure that qualified personnel properly gather and evaluate the information used to determine that the Class B pathogen reduction requirement has been met. I am aware that there are significant penalties for false certification including the possibility of fine and imprisonment.

Signature : _____ Date : _____

VECTOR ATTRACTION REDUCTION CERTIFICATION 2006

POTW: City of Corvallis WWRP

Source Name: SSB 9200 - Class B

Source Period: Jan-1-2006 - Dec-31-2006

I certify, under penalty of law, that the Class B vector attraction reduction requirement in 503.33(b)(1) has been met. This determination has been made under my direction and supervision in accordance with the system designed to ensure that qualified personnel properly gather and evaluate the information used to determine that the Class B vector attraction reduction requirement has been met. I am aware that there are significant penalties for false certification including the possibility of fine and imprisonment.

Signature : _____ Date : _____

BDMS FACILITY REPORT

Date Printed: 1/3/2007

Facility Name **CORVALLIS WWRP** Permit Number **OR002636-1**

GENERAL FACILITY INFORMATION

Annual Report Submitte 1/3/2007
Alternate Permit# 101714
Region X
Hydrologic Unit 22
Field Office

EPA ID Code
Biosolids Facility Indicator (S/O/E
Authority Name CORVALLIS, CITY OF
Use for Analysis
Latitude 44.574 Longitude 123.253
Plant Type TF/AS

Facility Physical Address:
Street 1304 NE 2ND
County BENTON
City/St CORVALLIS, OR
Zip Code 97330
Phone 541-766-6934

Facility Mailing Address:
Street PO BOX 1083
City/St CORVALLIS, OR
County BENTON
Zip Code 97339
Phone 541-766-6934

Operator-in-charge DAN HANTHORN
Title PLANT SUPERVISOR
License No. T-4571
Phone 541-754-1757 Fax 541-766-6753
Certification Grade IV

Responsible Official DAN HANTHORN
Title PLANT SUPERVISOR

Contact Person GENE FREEL
Title BIOSOLIDS COORDINATOR
Phone 541-766-6729 EXT527
E-mail GENE.FREEL@CI.CORVALLIS.OR.US
Fax 541-766-6753

Permit Issued 08/01/1999 Permit Expires 06/01/2004 Last Inspection Date 06/30/2005
Influent Flow (MGD) 0.00 Influent TSS 0.00 Influent BOD (mg/L) 0.00
Activity Status? (A/I) A MaJor/MiNor? (J/N) J Pretreatment? (Y/N) Y
Indian Lands? (Y/N) N Class 1? (Y/N) Y Report Required? Y
Facility send biosolids out of state? (Y/N) N

BDMS FACILITY REPORT

Date Printed: 1/3/2007

Facility Name **CORVALLIS WWRP** Permit Number **OR002636-1**

CONTRACT APPLIER(S)/HAULER(S)

Name

Street

City/State Zip

County

Contact Phone

Amount of Use: (Majority/Occassional)

BDMS FACILITY REPORT

Date Printed: 1/3/2007

Facility Name **CORVALLIS WWRP** Permit Number **OR002636-1**

BIOSOLIDS TREATMENT PROVIDED (No. of Units or 999 as default)

THICKENING:

1.	Gravity	0
2.	DAF	0
3.	Centrifuge	0
4.		0

STABILIZATION:

5.	Aerobic Dig.	0
6.	Anaerobic Dig.	2
7.	Heat Treat	0
8.	Wet Oxidation	0
9.	Chemical (Lime	0
10.	Composti	0
11.	Biosolids Lagoons	2
12		0

CONDITIONING:

13.	Chemical Cond.	0
14		0

DEWATERING:

15.	Vacuum Filter	0
16.	Pressure Filter	0
17.	Belt Filter	0
18.	Drying Bed	0
19.	Drying Lagoon	0
20.	Heat Drying	0
21.	Centrifuge	0
22		0

OTHER:

23.	Wastewater Lagoon	0
24.	Mixing of Biosolid	0
25.	Oxidation Ditch	0
26.	Incineration	0
27.	Septage	0
28		0

BDMS FACILITY REPORT

Date Printed: 1/3/2007

Facility Name **CORVALLIS WWRP** Permit Number **OR002636-1**

FINAL USE/DISPOSAL PRACTICES (dmt/yr) FOR MONITORING YEAR 2006

TOTAL ANNUAL PRODUCTION (Predigestion)	0.00		
TOTAL ANNUAL PRODUCTION (Postdigestion)	510.00		
LAND APPLICATION (Total)	510.00		
Bulk Biosolids:	510.00	Derived Material:	0.0
Agricultural Land	510.00	Agricultural Land	0.0
Range Land	0.00	Range Land	0.0
Forest	0.00	Forest	0.0
Public Contact Site	0.00	Public Contact Site	0.0
Reclamation Site	0.00	Reclamation Site	0.0
Sold or Given Away	0.00	Sold or Given Away	0.0
Lawn or Garden	0.00	Lawn or Garden	0.0
SURFACE DISPOSAL (Total)	0.00		
With Liner & LCS	0.00		
Without Liner & LCS	0.00		
LANDFILL (Total)	0.00		
Landfill Disposal	0.00	Landfill Cover	0.0
Landfill Name			
Does landfill meet 40CFR258? (Y/N)			
INCINERATION	0.00		
TRANSPORTED TO ANOTHER FACILITY(S)	0.00	**RECEIVED FROM ANOTHER FACILITY(S)**	0.00
Name		Name	
Address		Address	
State(s)		State(s)	
Phone		Phone	
OTHER	0.00		
STORED	0.00		
CALCULATED PRODUCED	510.00		
LONG TERM TREATMENT	0.00		

Was land application used for any of the sites? (Y/N)

Pathogen Certification? (Y/N/NA)	**Y**
VAR Certification? (Y/N/NA)	**Y**
Management Practice Certification? (Y/N/NA)	**Y**
Landfill Certification? (Y/N/NA)	**NA**

BDMS FACILITY REPORT

Date Printed:

Facility Name **CORVALLIS WWRP** Permit Number **OR002636-1**

Monitoring Year **2006** Use/disposal Practice **LA BULK AGRICULTURAL LAND**

No. of Analysis required per monitoring year? **4**

Approved methods? **Y** All in dry weight? (Y/N) **Y** Required Metals? (Y/N) **Y**

Pollutant	Average	Maximum	Analysis/yr	Comments
Arsenic (mg/kg)	5.80	6.40	4	
Cadmium (mg/kg)	3.08	3.40	4	
Chromium (mg/kg)	53.50	59.00	4	
Copper (mg/kg)	557.50	595.00	4	
Lead (mg/kg)	50.00	57.00	4	
Mercury (mg/kg)	1.54	2.50	4	
Molybdenum (mg/kg)	8.42	10.10	4	
Nickel (mg/kg)	28.25	32.00	4	
Selenium (mg/kg)	9.22	11.30	4	
Zinc (mg/kg)	1,057.50	1,070.00	4	
Salmonella (#/g)	0.00	0.00	0	
Helminth OVA (#/g)	0.00	0.00	0	
Enteric Virus (PFU/g)	0.00	0.00	0	
Nitrite & Nitrate (%)	0.00	0.00	0	
TKN (%)	3.72	4.36	4	
Ammonia (%	1.19	1.53	4	
Solids (%)	7.52	8.40	4	
Phosphorus (%)	0.53	1.43	4	

	Geometric Mean	Maximum	Analysis/yr	Comments
Fecal Coliform (#/g)	10.25	21.00	4	

Paint Filter Test? (P/F) TCLP? (P/F)

LAND APPLICATION SITE INFORMATION FOR
CORVALLIS WWRP
OR002636-1

Monitoring Year:	**2006**		
Site Name:	**ANDERSON**	Site No:	**10**
Hydrologic Unit:			
Owner:	**LLOYD ANDERSON**		
Operator:	**LLOYDANDERSON**		
Applier:	**CITY OF CORVALLIS**		
Latitude:		Longitude:	
Location:	**4210 NW CRESCENT VALLEY DRIVE**		
Section:	**14**		
Township:	**T11S**	Range:	**R5W**
Size (acres):	**15.03**	Size (hectares):	**6.08**
Crop:	**GRASS HAY**		
Application Rate (tons/acre):	**3.44**	Application Rate (MT/HA):	**7.70**

	English Units		Metric Units	
Recommended N for Crop	**100.00**	lbs/Acre	**112.00**	Kg/Ha
Nitrogen Available:	**22.50**	lbs/Dry Ton	**54.68**	Kg/Metic Ton
Total Biosolids Applied:	**51.63**	Dry Tons	**46.84**	Dry Metric Tons
Actual Application Rate:	**3.44**	Dry Tons/Acre	**7.70**	Dry Metric Tons / Ha
Total Recommended N:	**1,503.00**	lbs/field	**681.75**	Kg/Field
Total Applied N:	**1,161.70**	lbs/field	**526.94**	Kg/Field
% of Recommended N:	**77.29**	%	**77.29**	%
Total P Applied:	**1,476.65**	lbs/field	**669.80**	Kg/Field
Total K Applied:	**279.84**	lbs/field	**126.93**	Kg/Field

LAND APPLICATION SITE INFORMATION FOR CORVALLIS WWRP OR002636-1

Individual Load Tracking

Haul # / Desc	Date Hauled	Date Applied	Gallons	% Total Solids	Wet Tons	Dry Tons	lbs N / load	lbs N / DT	lbs P / load	lbs P / DT	lbs K / load	lbs K / DT
6565/1	7/1/02	7/1/02	16,800.00	4.00	70.06	2.80	73.45	26.21	100.88	36.00	9.53	3.40
6565/2	7/2/02	7/2/02	50,400.00	3.30	210.17	6.94	181.78	26.21	249.68	36.00	23.58	3.40
6565/3	7/3/02	7/3/02	5,600.00	4.50	23.35	1.05	27.54	26.21	37.83	36.00	3.57	3.40
6575/1	6/24/02	6/24/02	22,400.00	3.10	93.41	2.90	75.89	26.21	104.24	36.00	9.85	3.40
6575/2	6/25/02	6/25/02	28,000.00	3.10	116.76	3.62	94.87	26.21	130.30	36.00	12.31	3.40
6575/3	6/26/02	6/26/02	56,000.00	3.00	233.52	7.01	183.62	26.21	252.20	36.00	23.82	3.40
6575/4	6/27/02	6/27/02	56,000.00	3.40	233.52	7.94	208.10	26.21	285.83	36.00	26.99	3.40
6575/5	6/28/02	6/28/02	5,600.00	3.40	23.35	0.79	20.81	26.21	28.58	36.00	2.70	3.40
6575/6	7/1/02	7/1/02	11,200.00	4.00	46.70	1.87	48.96	26.21	67.25	36.00	6.35	3.40
6575/7	7/2/02	7/2/02	56,000.00	3.30	233.52	7.71	201.98	26.21	277.42	36.00	26.20	3.40
6575/1	7/9/03	7/9/03	11,200.00	5.90	46.70	2.76	75.56	27.42	121.24	44.00	11.57	4.20
6575/2	7/10/03	7/10/03	44,800.00	5.90	186.82	11.02	302.23	27.42	484.97	44.00	46.29	4.20
6575/3	7/11/03	7/11/03	44,800.00	6.10	186.82	11.40	312.47	27.42	501.41	44.00	47.86	4.20
6575/4	7/14/03	7/14/03	39,200.00	5.20	163.46	8.50	233.07	27.42	374.01	44.00	35.70	4.20
6575/5	7/15/03	7/15/03	39,200.00	5.60	163.46	9.15	251.00	27.42	402.78	44.00	38.45	4.20
6575/6	7/16/03	7/16/03	11,200.00	5.70	46.70	2.66	73.00	27.42	117.13	44.00	11.18	4.20
6565/1	7/10/03	7/10/03	5,600.00	5.90	23.35	1.38	37.78	27.42	60.62	44.00	5.79	4.20
6565/2	7/11/03	7/11/03	39,200.00	6.10	163.46	9.97	273.41	27.42	438.74	44.00	41.88	4.20
6565/3	7/14/03	7/14/03	44,800.00	5.20	186.82	9.71	266.37	27.42	427.43	44.00	40.80	4.20
6565/4	7/15/03	7/15/03	39,200.00	5.60	163.46	9.15	251.00	27.42	402.78	44.00	38.45	4.20
6565/5	7/16/03	7/16/03	11,200.00	5.70	46.70	2.66	73.00	27.42	117.13	44.00	11.18	4.20
6575-1	7/15/04	7/15/04	22,400.00	5.90	93.41	5.51	117.50	21.32	24.03	4.36	28.88	5.24
6575-2	7/16/04	7/16/04	44,800.00	4.80	186.82	8.97	191.18	21.32	39.46	4.40	46.99	5.24
6575-3	7/19/04	7/19/04	44,800.00	4.60	186.82	8.59	183.21	21.32	37.81	4.40	45.03	5.24
6575-4	7/23/04	7/23/04	44,800.00	4.20	186.82	7.85	167.28	21.32	34.52	4.40	41.11	5.24
6575-5	7/26/04	7/26/04	50,400.00	4.40	210.17	9.25	197.15	21.32	40.69	4.40	48.46	5.24
6575-6	7/27/04	7/27/04	28,000.00	5.00	116.76	5.84	114.66	19.64	8.52	1.46	29.07	4.98
6565-1	7/20/04	7/20/04	39,200.00	5.20	163.46	8.50	181.22	21.32	37.40	4.40	44.54	5.24
6565-2	7/21/04	7/21/04	39,200.00	4.80	163.46	7.85	167.28	21.32	34.52	4.40	41.11	5.24
6565-3	7/22/04	7/22/04	44,800.00	5.00	186.82	9.34	199.15	21.32	41.10	4.40	48.95	5.24
6565/4	7/10/06	7/10/06	44,800.00	4.50	186.82	8.41	189.15	22.50	240.43	28.60	45.56	5.42
6565/5	7/11/06	7/11/06	44,800.00	4.90	186.82	9.15	205.96	22.50	261.80	28.60	49.61	5.42
6565/6	7/12/06	7/12/06	5,600.00	3.40	23.35	0.79	17.86	22.50	22.71	28.60	4.30	5.42
6565/7	7/17/06	7/17/06	5,600.00	4.50	23.35	1.05	23.64	22.50	30.05	28.60	5.70	5.42
6565/8	7/18/06	7/18/06	5,600.00	5.00	23.35	1.17	26.27	22.50	33.39	28.60	6.33	5.42
6575/1	7/10/06	7/10/06	11,200.00	4.50	46.70	2.10	47.29	22.50	60.11	28.60	11.39	5.42
6575/2	7/11/06	7/11/06	33,600.00	4.90	140.11	6.87	154.47	22.50	196.35	28.60	37.21	5.42
6575/3	7/18/06	7/18/06	5,600.00	5.00	23.35	1.17	26.27	22.50	33.39	28.60	6.33	5.42
6565/1	7/5/06	7/5/06	11,200.00	5.90	46.70	2.76	62.00	22.50	78.81	28.60	14.94	5.42
6565/2	7/6/06	7/6/06	44,800.00	5.70	186.82	10.65	239.59	22.50	304.55	28.60	57.71	5.42
6565/3	7/7/06	7/7/06	39,200.00	4.60	163.46	7.52	169.19	22.50	215.05	28.60	40.75	5.42

Avg % Total Solids:	**4.75**
Total Gallons:	**1,248,800.00**
Total Dry Tons:	**244.31**
Gallons / Acre:	**83,087.16**

Total Cumulative Metal Loading (Kg/Hectare)

As Average:	**0.48**
As Maximum:	**0.53**
Cd Average:	**0.26**
Cd Maximum	**0.28**
Cu Average:	**46.43**
Cu Maximum	**49.56**
Pb Average:	**4.16**
Pb Maximum	**4.75**
Hg Average:	**0.13**
Hg Maximum	**0.21**
Mo Average:	**0.70**
Mo Maximum	**0.84**
Ni Average:	**2.35**
Ni Maximum:	**2.67**
Se Average:	**0.77**
Se Maximum	**0.94**
Zn Average:	**88.08**
Zn Maximum:	**89.12**

Comments:

LAND APPLICATION SITE INFORMATION FOR CORVALLIS WWRP OR002636-1

Monitoring Year:	**2006**		
Site Name:	**ANDERSON**	Site No:	**12**
Hydrologic Unit:			
Owner:	**LLOYD ANDERSON**		
Operator:	**LLOYD ANDERSON**		
Applier:	**CITY OF CORVALLIS**		
Latitude:		Longitude:	
Location:	**4210 NW CRESCENT VALLEY DRIVE**		
Section:	**14**		
Township:	**T11S**	Range:	**R5W**
Size (acres):	**7.43**	Size (hectares):	**3.01**
Crop:	**GRASS HAY**		
Application Rate (tons/acre):	**3.89**	Application Rate (MT/HA):	**8.71**

	English Units		Metric Units	
Recommended N for Crop	**100.00**	lbs/Acre	**112.00**	Kg/Ha
Nitrogen Available:	**22.50**	lbs/Dry Ton	**54.68**	Kg/Metic Ton
Total Biosolids Applied:	**28.91**	Dry Tons	**26.23**	Dry Metric Tons
Actual Application Rate:	**3.89**	Dry Tons/Acre	**8.71**	Dry Metric Tons / Ha
Total Recommended N:	**743.00**	lbs/field	**337.02**	Kg/Field
Total Applied N:	**650.47**	lbs/field	**295.05**	Kg/Field
% of Recommended N:	**87.55**	%	**87.55**	%
Total P Applied:	**826.82**	lbs/field	**375.04**	Kg/Field
Total K Applied:	**156.69**	lbs/field	**71.07**	Kg/Field

LAND APPLICATION SITE INFORMATION FOR CORVALLIS WWRP OR002636-1

Individual Load Tracking

Haul # / Desc	Date Hauled	Date Applied	Gallons	% Total Solids	Wet Tons	Dry Tons	lbs N / load	lbs N / DT	lbs P / load	lbs P / DT	lbs K / load	lbs K / DT
6565/1	7/5/02	7/5/02	11,200.00	4.50	46.70	2.10	55.09	26.21	75.66	36.00	7.15	3.40
6575/1	7/5/02	7/5/02	11,200.00	4.50	46.70	2.10	55.09	26.21	75.66	36.00	7.15	3.40
6565/2	7/8/02	7/8/02	28,000.00	2.20	116.76	2.57	67.33	26.21	92.47	36.00	8.73	3.40
6575/2	7/8/02	7/8/02	33,600.00	2.20	140.11	3.08	80.79	26.21	110.97	36.00	10.48	3.40
6565/3	7/8/02	7/8/02	16,800.00	2.90	70.06	2.03	53.25	26.21	73.14	36.00	6.91	3.40
6575/3	7/8/02	7/8/02	16,800.00	2.90	70.06	2.03	53.25	26.21	73.14	36.00	6.91	3.40
6565/4	7/9/02	7/9/02	5,600.00	3.50	23.35	0.82	21.42	26.21	29.42	36.00	2.78	3.40
6575/4	7/9/02	7/9/02	44,800.00	3.50	186.82	6.54	171.38	26.21	235.39	36.00	22.23	3.40
6565/1	7/17/03	7/17/03	33,600.00	5.50	140.11	7.71	211.30	27.42	339.07	44.00	32.37	4.20
6565/2	7/18/03	7/18/03	33,600.00	5.30	140.11	7.43	203.62	27.42	326.74	44.00	31.19	4.20
6575/1	7/17/03	7/17/03	28,000.00	5.50	116.76	6.42	176.09	27.42	282.56	44.00	26.97	4.20
6575/2	7/18/03	7/18/03	28,000.00	5.30	116.76	6.19	169.68	27.42	272.28	44.00	25.99	4.20
6575-1	7/29/04	7/29/04	28,000.00	5.10	116.76	5.95	116.95	19.64	8.69	1.46	29.65	4.98
6575-2	7/30/04	7/30/04	22,400.00	5.00	93.41	4.67	91.73	19.64	6.82	1.46	23.26	4.98
6565-1	8/30/04	8/30/04	5,600.00	2.60	23.35	0.61	11.92	19.64	0.89	1.46	3.02	4.98
6565-2	8/31/04	8/31/04	33,600.00	2.60	140.11	3.64	71.55	19.64	5.32	1.46	18.14	4.98
6575/3	8/31/04	8/31/04	28,000.00	2.60	116.76	3.04	59.62	19.64	4.43	1.46	15.12	4.98
6565-3	9/1/04	9/1/04	44,800.00	4.50	186.82	8.41	165.11	19.64	12.27	1.46	41.87	4.98
6575-4	9/1/04	9/1/04	28,000.00	4.50	116.76	5.25	103.19	19.64	7.67	1.46	26.17	4.98
6565-4	9/2/04	9/2/04	11,200.00	5.20	46.70	2.43	47.70	19.64	3.55	1.46	12.09	4.98
6565/1	7/12/06	7/12/06	11,200.00	3.40	46.70	1.59	35.73	22.50	45.41	28.60	8.61	5.42
6565/2	7/13/06	7/13/06	44,800.00	4.80	186.82	8.97	201.76	22.50	256.46	28.60	48.60	5.42
6565/3	7/14/06	7/14/06	22,400.00	4.60	93.41	4.30	96.68	22.50	122.89	28.60	23.29	5.42
6575/1	7/12/06	7/12/06	5,600.00	3.40	23.35	0.79	17.86	22.50	22.71	28.60	4.30	5.42
6575/2	7/13/06	7/13/06	44,800.00	4.80	186.82	8.97	201.76	22.50	256.46	28.60	48.60	5.42
6575/3	7/14/06	7/14/06	22,400.00	4.60	93.41	4.30	96.68	22.50	122.89	28.60	23.29	5.42

Avg % Total Solids:	**4.06**
Total Gallons:	**644,000.00**
Total Dry Tons:	**111.93**
Gallons / Acre:	**86,675.64**

Total Cumulative Metal Loading (Kg/Hectare)

As Average:	**0.48**
As Maximum:	**0.53**
Cd Average:	**0.26**
Cd Maximum	**0.28**
Cu Average:	**46.43**
Cu Maximum	**49.56**
Pb Average:	**4.16**
Pb Maximum	**4.75**
Hg Average:	**0.13**
Hg Maximum	**0.21**
Mo Average:	**0.70**
Mo Maximum	**0.84**
Ni Average:	**2.35**
Ni Maximum:	**2.67**
Se Average:	**0.77**
Se Maximum	**0.94**
Zn Average:	**88.08**
Zn Maximum:	**89.12**

LAND APPLICATION SITE INFORMATION FOR CORVALLIS WWRP OR002636-1

Monitoring Year: **2006**
Site Name: **ANDERSON** Site No: **13**
Hydrologic Unit:
Owner: **LLOYD ANDERSON**
Operator: **LLOYD ANDERSON**
Applier: **CITY OF CORVALLIS**
Latitude: Longitude:
Location: **4210 NW CRESCENT VALLEY DRIVE**
Section: **14**
Township: **T11S** Range: **R5W**
Size (acres): **2.05** Size (hectares): **0.83**
Crop: **GRASS HAY**
Application Rate (tons/acre): **4.33** Application Rate (MT/HA): **9.70**

	English Units		Metric Units	
Recommended N for Crop	**100.00**	lbs/Acre	**112.00**	Kg/Ha
Nitrogen Available:	**22.50**	lbs/Dry Ton	**54.68**	Kg/Metic Ton
Total Biosolids Applied:	**8.87**	Dry Tons	**8.05**	Dry Metric Tons
Actual Application Rate:	**4.33**	Dry Tons/Acre	**9.70**	Dry Metric Tons / Ha
Total Recommended N:	**205.00**	lbs/field	**92.99**	Kg/Field
Total Applied N:	**199.66**	lbs/field	**90.56**	Kg/Field
% of Recommended N:	**97.40**	%	**97.39**	%
Total P Applied:	**253.79**	lbs/field	**115.12**	Kg/Field
Total K Applied:	**48.10**	lbs/field	**21.82**	Kg/Field

Individual Load Tracking

Haul # / Desc	Date Hauled	Date Applied	Gallons	% Total Solids	Wet Tons	Dry Tons	lbs N / load	lbs N / DT	lbs P / load	lbs P / DT	lbs K / load	lbs K / DT
6565/1	7/3/02	7/3/02	16,800.00	4.50	70.06	3.15	82.63	26.21	113.49	36.00	10.72	3.40
6565/2	7/5/02	7/5/02	22,400.00	4.50	93.41	4.20	110.17	26.21	151.32	36.00	14.29	3.40
6575/1	7/5/02	7/5/02	11,200.00	4.50	46.70	2.10	55.09	26.21	75.66	36.00	7.15	3.40
6565/1	7/18/03	7/18/03	5,600.00	5.30	23.35	1.24	33.94	27.42	54.46	44.00	5.20	4.20
6565/2	7/21/03	7/21/03	11,200.00	5.10	46.70	2.38	65.31	27.42	104.80	44.00	10.00	4.20
6575/1	7/18/03	7/18/03	11,200.00	5.30	46.70	2.48	67.87	27.42	108.91	44.00	10.40	4.20
6575/2	7/21/03	7/21/03	11,200.00	5.10	46.70	2.38	65.31	27.42	104.80	44.00	10.00	4.20
6575-1	9/1/04	9/1/04	5,600.00	4.50	23.35	1.05	20.64	19.64	1.53	1.46	5.23	4.98
6565-1	9/2/04	9/2/04	39,200.00	5.20	163.46	8.50	166.94	19.64	12.41	1.46	42.33	4.98
6565-2	9/3/04	9/3/04	11,200.00	5.50	46.70	2.57	50.45	19.64	3.75	1.46	12.79	4.98
6565/1	7/20/06	7/20/06	28,000.00	4.90	116.76	5.72	128.73	22.50	163.63	28.60	31.01	5.42
6575/1	7/17/06	7/17/06	16,800.00	4.50	70.06	3.15	70.93	22.50	90.16	28.60	17.09	5.42

Avg % Total Solids: **4.91**
Total Gallons: **190,400.00**
Total Dry Tons: **38.93**
Gallons / Acre: **92,878.05**

LAND APPLICATION SITE INFORMATION FOR
CORVALLIS WWRP
OR002636-1

Total Cumulative Metal Loading (Kg/Hectare)

As Average:	**0.48**
As Maximum:	**0.53**
Cd Average:	**0.26**
Cd Maximum	**0.28**
Cu Average:	**46.43**
Cu Maximum	**49.56**
Pb Average:	**4.16**
Pb Maximum	**4.75**
Hg Average:	**0.13**
Hg Maximum	**0.21**
Mo Average:	**0.70**
Mo Maximum	**0.84**
Ni Average:	**2.35**
Ni Maximum:	**2.67**
Se Average:	**0.77**
Se Maximum	**0.94**
Zn Average:	**88.08**
Zn Maximum:	**89.12**

Comments:

LAND APPLICATION SITE INFORMATION FOR CORVALLIS WWRP OR002636-1

Monitoring Year: **2006**
Site Name: **ANDERSON** Site No: **14**
Hydrologic Unit:
Owner: **LLOYD ANDERSON**
Operator: **LLOYD ANDERSON**
Applier: **CITY OF CORVALLIS**
Latitude: Longitude:
Location: **4210 NW CRESCENT VALLEY DRIVE**
Section: **14**
Township: **T11S** Range: **R5W**
Size (acres): **2.42** Size (hectares): **0.98**
Crop: **GRASS HAY**
Application Rate (tons/acre): **4.15** Application Rate (MT/HA): **9.30**

	English Units		Metric Units	
Recommended N for Crop	**100.00**	lbs/Acre	**112.00**	Kg/Ha
Nitrogen Available:	**22.50**	lbs/Dry Ton	**54.68**	Kg/Metic Ton
Total Biosolids Applied:	**10.04**	Dry Tons	**9.11**	Dry Metric Tons
Actual Application Rate:	**4.15**	Dry Tons/Acre	**9.30**	Dry Metric Tons / Ha
Total Recommended N:	**242.00**	lbs/field	**109.77**	Kg/Field
Total Applied N:	**225.93**	lbs/field	**102.48**	Kg/Field
% of Recommended N:	**93.36**	%	**93.36**	%
Total P Applied:	**287.18**	lbs/field	**130.26**	Kg/Field
Total K Applied:	**54.42**	lbs/field	**24.68**	Kg/Field

Individual Load Tracking

Haul # / Desc	Date Hauled	Date Applied	Gallons	% Total Solids	Wet Tons	Dry Tons	lbs N / load	lbs N / DT	lbs P / load	lbs P / DT	lbs K / load	lbs K / DT
6565/1	7/3/02	7/3/02	11,200.00	4.50	46.70	2.10	55.09	26.21	75.66	36.00	7.15	3.40
6565/2	7/5/02	7/5/02	28,000.00	4.50	116.76	5.25	137.71	26.21	189.15	36.00	17.86	3.40
6575/1	6/28/02	6/28/02	22,400.00	3.40	93.41	3.18	83.24	26.21	114.33	36.00	10.80	3.40
6565/1	7/16/03	7/16/03	28,000.00	5.70	116.76	6.66	182.49	27.42	292.83	44.00	27.95	4.20
6575/1	7/16/03	7/16/03	33,600.00	5.70	140.11	7.99	218.99	27.42	351.40	44.00	33.54	4.20
6575/2	7/17/03	7/17/03	5,600.00	5.50	23.35	1.28	35.22	27.42	56.51	44.00	5.39	4.20
6575-1	7/27/04	7/27/04	16,800.00	5.00	70.06	3.50	68.79	19.64	5.11	1.46	17.44	4.98
6575-2	7/28/04	7/28/04	44,800.00	5.10	186.82	9.53	187.12	19.64	13.91	1.46	47.45	4.98
6575-3	7/29/04	7/29/04	16,800.00	5.10	70.06	3.57	70.17	19.64	5.22	1.46	17.79	4.98
6565/1	7/12/06	7/12/06	28,000.00	3.40	116.76	3.97	89.32	22.50	113.54	28.60	21.52	5.42
6575/1	7/12/06	7/12/06	28,000.00	3.40	116.76	3.97	89.32	22.50	113.54	28.60	21.52	5.42
6575/2	7/17/06	7/17/06	11,200.00	4.50	46.70	2.10	47.29	22.50	60.11	28.60	11.39	5.42

Avg % Total Solids: **4.65**
Total Gallons: **274,400.00**
Total Dry Tons: **53.10**
Gallons / Acre: **113,388.43**

LAND APPLICATION SITE INFORMATION FOR
CORVALLIS WWRP
OR002636-1

Total Cumulative Metal Loading (Kg/Hectare)

As Average:	**0.48**
As Maximum:	**0.53**
Cd Average:	**0.26**
Cd Maximum	**0.28**
Cu Average:	**46.43**
Cu Maximum	**49.56**
Pb Average:	**4.16**
Pb Maximum	**4.75**
Hg Average:	**0.13**
Hg Maximum	**0.21**
Mo Average:	**0.70**
Mo Maximum	**0.84**
Ni Average:	**2.35**
Ni Maximum:	**2.67**
Se Average:	**0.77**
Se Maximum	**0.94**
Zn Average:	**88.08**
Zn Maximum:	**89.12**

Comments:

LAND APPLICATION SITE INFORMATION FOR CORVALLIS WWRP OR002636-1

Monitoring Year: **2006**
Site Name: **ANDERSON**
Site No: **15**
Hydrologic Unit:
Owner: **LLOYD ANDERSON**
Operator: **LLOYD ANDERSON**
Applier: **CITY OF CORVALLIS**
Latitude:
Longitude:
Location: **4210 NW CRESCENT VALLEY DRIVE**
Section: **14**
Township: **T11S**
Range: **R5W**
Size (acres): **3.70**
Size (hectares): **1.50**
Crop: **GRASS HAY**
Application Rate (tons/acre): **4.59**
Application Rate (MT/HA): **10.27**

	English Units		Metric Units	
Recommended N for Crop	**100.00**	lbs/Acre	**112.00**	Kg/Ha
Nitrogen Available:	**22.50**	lbs/Dry Ton	**54.68**	Kg/Metic Ton
Total Biosolids Applied:	**16.98**	Dry Tons	**15.40**	Dry Metric Tons
Actual Application Rate:	**4.59**	Dry Tons/Acre	**10.27**	Dry Metric Tons / Ha
Total Recommended N:	**370.00**	lbs/field	**167.83**	Kg/Field
Total Applied N:	**381.98**	lbs/field	**173.26**	Kg/Field
% of Recommended N:	**103.24**	%	**103.24**	%
Total P Applied:	**485.54**	lbs/field	**220.24**	Kg/Field
Total K Applied:	**92.01**	lbs/field	**41.74**	Kg/Field

Individual Load Tracking

Haul # / Desc	Date Hauled	Date Applied	Gallons	% Total Solids	Wet Tons	Dry Tons	lbs N / load	lbs N / DT	lbs P / load	lbs P / DT	lbs K / load	lbs K / DT
6565/1	7/10/02	7/10/02	39,200.00	2.70	163.46	4.41	115.68	26.21	158.89	36.00	15.01	3.40
6575/1	7/10/02	7/10/02	39,200.00	2.70	163.46	4.41	115.68	26.21	158.89	36.00	15.01	3.40
6565/1	7/21/03	7/21/03	28,000.00	5.10	116.76	5.95	163.28	27.42	262.01	44.00	25.01	4.20
6575/1	7/21/03	7/21/03	33,600.00	5.10	140.11	7.15	195.94	27.42	314.41	44.00	30.01	4.20
6565-1	9/3/04	9/3/04	39,200.00	5.50	163.46	8.99	176.57	19.64	13.13	1.46	44.77	4.98
6565-2	9/7/04	9/7/04	11,200.00	4.10	46.70	1.91	37.61	19.64	2.80	1.46	9.54	4.98
6575-1	9/7/04	9/7/04	11,200.00	4.10	46.70	1.91	37.61	19.64	2.80	1.46	9.54	4.98
6565/1	7/14/06	7/14/06	22,400.00	4.60	93.41	4.30	96.68	22.50	122.89	28.60	23.29	5.42
6565/2	7/17/06	7/17/06	39,200.00	4.50	163.46	7.36	165.51	22.50	210.38	28.60	39.87	5.42
6575/1	7/14/06	7/14/06	16,800.00	4.60	70.06	3.22	72.51	22.50	92.17	28.60	17.47	5.42
6575/2	7/17/06	7/17/06	11,200.00	4.50	46.70	2.10	47.29	22.50	60.11	28.60	11.39	5.42

Avg % Total Solids: **4.32**
Total Gallons: **291,200.00**
Total Dry Tons: **51.72**
Gallons / Acre: **78,702.70**

Total Cumulative Metal Loading (Kg/Hectare)

As Average:	**0.48**
As Maximum:	**0.53**
Cd Average:	**0.26**
Cd Maximum	**0.28**
Cu Average:	**46.43**
Cu Maximum	**49.56**
Pb Average:	**4.16**
Pb Maximum	**4.75**
Hg Average:	**0.13**
Hg Maximum	**0.21**
Mo Average:	**0.70**
Mo Maximum	**0.84**
Ni Average:	**2.35**
Ni Maximum:	**2.67**
Se Average:	**0.77**
Se Maximum	**0.94**
Zn Average:	**88.08**
Zn Maximum:	**89.12**

Comments:

LAND APPLICATION SITE INFORMATION FOR
CORVALLIS WWRP
OR002636-1

Monitoring Year:	**2006**		
Site Name:	**DLD**	Site No:	**21**
Hydrologic Unit:			
Owner:	**CITY OF CORVALLIS**		
Operator:	**CITY OF CORVALLIS**		
Applier:	**CITY OF CORVALLIS**		
Latitude:		Longitude:	
Location:	**1304 NE 2ND**		
Section:	**10**		
Township:	**713S**	Range:	**R6W**
Size (acres):	**17.14**	Size (hectares):	**6.94**
Crop:	**GRASS HAY**		
Application Rate (tons/acre):	**3.96**	Application Rate (MT/HA):	**8.88**

	English Units		Metric Units	
Recommended N for Crop	**100.00**	lbs/Acre	**112.00**	Kg/Ha
Nitrogen Available:	**22.50**	lbs/Dry Ton	**54.68**	Kg/Metic Ton
Total Biosolids Applied:	**67.91**	Dry Tons	**61.61**	Dry Metric Tons
Actual Application Rate:	**3.96**	Dry Tons/Acre	**8.88**	Dry Metric Tons / Ha
Total Recommended N:	**1,714.00**	lbs/field	**777.46**	Kg/Field
Total Applied N:	**1,527.92**	lbs/field	**693.05**	Kg/Field
% of Recommended N:	**89.14**	%	**89.14**	%
Total P Applied:	**1,942.16**	lbs/field	**880.95**	Kg/Field
Total K Applied:	**368.06**	lbs/field	**166.95**	Kg/Field

LAND APPLICATION SITE INFORMATION FOR CORVALLIS WWRP OR002636-1

Individual Load Tracking

Haul # / Desc	Date Hauled	Date Applied	Gallons	% Total Solids	Wet Tons	Dry Tons	lbs N / load	lbs N / DT	lbs P / load	lbs P / DT	lbs K / load	lbs K / DT
6565/1	7/11/02	7/11/02	44,800.00	4.40	186.82	8.22	215.44	26.21	295.92	36.00	27.95	3.40
6575/1	7/11/02	7/11/02	67,200.00	4.40	280.22	12.33	323.17	26.21	443.87	36.00	41.92	3.40
6565/2	7/15/02	7/15/02	128,800.00	4.40	537.10	23.63	619.40	26.21	850.76	36.00	80.35	3.40
6575/2	7/15/02	7/15/02	128,800.00	4.40	537.10	23.63	619.40	26.21	850.76	36.00	80.35	3.40
6565/3	7/16/02	7/16/02	33,600.00	4.40	140.11	6.16	161.58	26.21	221.94	36.00	20.96	3.40
6575/3	7/16/02	7/16/02	16,800.00	4.40	70.06	3.08	80.79	26.21	110.97	36.00	10.48	3.40
6565/1	7/15/03	7/15/03	11,200.00	5.60	46.70	2.62	71.71	27.42	115.08	44.00	10.98	4.20
6565/2	9/4/03	9/4/03	11,200.00	5.50	46.70	2.57	20.70	8.06	14.28	5.56	15.31	5.96
6565/3	9/5/03	9/5/03	11,200.00	5.30	46.70	2.48	19.95	8.06	13.76	5.56	14.75	5.96
6565/4	9/8/03	9/8/03	39,200.00	5.00	163.46	8.17	65.88	8.06	45.44	5.56	48.71	5.96
6575/1	7/15/03	7/15/03	11,200.00	5.60	46.70	2.62	71.71	27.42	115.08	44.00	10.98	4.20
6575/2	9/5/03	9/5/03	33,600.00	5.30	140.11	7.43	59.85	8.06	41.29	5.56	44.26	5.96
6575/3	9/8/03	9/8/03	44,800.00	5.00	186.82	9.34	75.29	8.06	51.93	5.56	55.67	5.96
6575/4	9/17/03	9/17/03	33,600.00	5.00	140.11	7.01	56.47	8.06	38.95	5.56	41.75	5.96
6575/5	9/18/03	9/18/03	22,400.00	5.00	93.41	4.67	37.64	8.06	25.97	5.56	27.84	5.96
6575-1	7/15/04	7/15/04	5,600.00	5.90	23.35	1.38	27.06	19.64	2.01	1.46	6.86	4.98
6565-1	8/3/04	8/3/04	16,800.00	5.00	70.06	3.50	68.79	19.64	5.11	1.46	17.44	4.98
6575-2	8/4/04	8/4/04	67,200.00	4.70	280.22	13.17	258.67	19.64	19.23	1.46	65.59	4.98
6575-3	8/5/04	8/5/04	67,200.00	4.70	280.22	13.17	258.67	19.64	19.23	1.46	65.59	4.98
6565-2	8/9/04	8/9/04	67,200.00	5.20	280.22	14.57	286.19	19.64	21.27	1.46	72.57	4.98
6565-3	8/10/04	8/10/04	67,200.00	4.40	280.22	12.33	242.16	19.64	18.00	1.46	61.40	4.98
6565-4	8/11/04	8/11/04	61,600.00	4.80	256.87	12.33	242.16	19.64	18.00	1.46	61.40	4.98
6565-5	8/12/04	8/12/04	28,000.00	5.10	116.76	5.95	116.95	19.64	8.69	1.46	29.65	4.98
6565/1	7/18/06	7/18/06	28,000.00	5.00	116.76	5.84	131.35	22.50	166.97	28.60	31.64	5.42
6565/2	7/19/06	7/19/06	50,400.00	4.60	210.17	9.67	217.52	22.50	276.50	28.60	52.40	5.42
6565/3	7/20/06	7/20/06	22,400.00	4.90	93.41	4.58	102.98	22.50	130.90	28.60	24.81	5.42
6565/4	7/21/06	7/21/06	39,200.00	4.30	163.46	7.03	158.15	22.50	201.03	28.60	38.10	5.42
6565/5	7/24/06	7/24/06	39,200.00	2.70	163.46	4.41	99.30	22.50	126.23	28.60	23.92	5.42
6575/1	7/18/06	7/18/06	22,400.00	5.00	93.41	4.67	105.08	22.50	133.57	28.60	25.31	5.42
6575/2	7/19/06	7/19/06	78,400.00	4.60	326.93	15.04	338.37	22.50	430.11	28.60	81.51	5.42
6575/3	7/20/06	7/20/06	33,600.00	4.90	140.11	6.87	154.47	22.50	196.35	28.60	37.21	5.42
6575/4	7/21/06	7/21/06	33,600.00	4.30	140.11	6.02	135.56	22.50	172.31	28.60	32.65	5.42
6575/5	7/24/06	7/24/06	33,600.00	2.70	140.11	3.78	85.12	22.50	108.19	28.60	20.50	5.42

Avg % Total Solids:	**4.74**
Total Gallons:	**1,400,000.00**
Total Dry Tons:	**268.27**
Gallons / Acre:	**81,680.28**

Total Cumulative Metal Loading (Kg/Hectare)

As Average:	**0.48**
As Maximum:	**0.53**
Cd Average:	**0.26**
Cd Maximum	**0.28**
Cu Average:	**46.43**
Cu Maximum	**49.56**
Pb Average:	**4.16**
Pb Maximum	**4.75**
Hg Average:	**0.13**
Hg Maximum	**0.21**
Mo Average:	**0.70**
Mo Maximum	**0.84**
Ni Average:	**2.35**
Ni Maximum:	**2.67**
Se Average:	**0.77**
Se Maximum	**0.94**
Zn Average:	**88.08**
Zn Maximum:	**89.12**

Comments:

LAND APPLICATION SITE INFORMATION FOR CORVALLIS WWRP OR002636-1

Monitoring Year: **2006**
Site Name: **DLD**
Site No: **23**
Hydrologic Unit:
Owner: **CITY OF CORVALLIS**
Operator: **CITY OF CORVALLIS**
Applier: **CITY OF CORVALLIS**
Latitude:
Longitude:
Location: **1304 NE 2ND**
Section: **10**
Township: **T13S**
Range: **R6W**
Size (acres): **3.00**
Size (hectares): **1.21**
Crop: **GRASS HAY**
Application Rate (tons/acre): **3.89**
Application Rate (MT/HA): **8.76**

	English Units		Metric Units	
Recommended N for Crop	**100.00**	lbs/Acre	**112.00**	Kg/Ha
Nitrogen Available:	**22.50**	lbs/Dry Ton	**54.68**	Kg/Metic Ton
Total Biosolids Applied:	**11.68**	Dry Tons	**10.60**	Dry Metric Tons
Actual Application Rate:	**3.89**	Dry Tons/Acre	**8.76**	Dry Metric Tons / Ha
Total Recommended N:	**300.00**	lbs/field	**136.08**	Kg/Field
Total Applied N:	**262.71**	lbs/field	**119.16**	Kg/Field
% of Recommended N:	**87.57**	%	**87.57**	%
Total P Applied:	**333.93**	lbs/field	**151.47**	Kg/Field
Total K Applied:	**63.28**	lbs/field	**28.70**	Kg/Field

Individual Load Tracking

Haul # / Desc	Date Hauled	Date Applied	Gallons	% Total Solids	Wet Tons	Dry Tons	lbs N / load	lbs N / DT	lbs P / load	lbs P / DT	lbs K / load	lbs K / DT
6565/1	7/10/02	7/10/02	16,800.00	2.70	70.06	1.89	49.58	26.21	68.09	36.00	6.43	3.40
6575/1	7/10/02	7/10/02	16,800.00	2.70	70.06	1.89	49.58	26.21	68.09	36.00	6.43	3.40
6565/2	7/11/02	7/11/02	5,600.00	4.40	23.35	1.03	26.93	26.21	36.99	36.00	3.49	3.40
6575/2	7/11/02	7/11/02	5,600.00	4.40	23.35	1.03	26.93	26.21	36.99	36.00	3.49	3.40
6565/1	7/16/03	7/16/03	16,800.00	5.70	70.06	3.99	109.49	27.42	175.70	44.00	16.77	4.20
6575/1	7/16/03	7/16/03	16,800.00	5.70	70.06	3.99	109.49	27.42	175.70	44.00	16.77	4.20
6565-1	8/2/04	8/2/04	39,200.00	4.30	163.46	7.03	138.05	19.64	10.26	1.46	35.00	4.98
6565-2	8/3/04	8/3/04	16,800.00	5.00	70.06	3.50	68.79	19.64	5.11	1.46	17.44	4.98
6565/1	7/18/06	7/18/06	28,000.00	5.00	116.76	5.84	131.35	22.50	166.97	28.60	31.64	5.42
6575/1	7/18/06	7/17/06	28,000.00	5.00	116.76	5.84	131.35	22.50	166.97	28.60	31.64	5.42

Avg % Total Solids:	**4.49**
Total Gallons:	**190,400.00**
Total Dry Tons:	**36.03**
Gallons / Acre:	**63,466.67**

LAND APPLICATION SITE INFORMATION FOR
CORVALLIS WWRP
OR002636-1

Total Cumulative Metal Loading (Kg/Hectare)

As Average:	**0.48**
As Maximum:	**0.53**
Cd Average:	**0.26**
Cd Maximum	**0.28**
Cu Average:	**46.43**
Cu Maximum	**49.56**
Pb Average:	**4.16**
Pb Maximum	**4.75**
Hg Average:	**0.13**
Hg Maximum	**0.21**
Mo Average:	**0.70**
Mo Maximum	**0.84**
Ni Average:	**2.35**
Ni Maximum:	**2.67**
Se Average:	**0.77**
Se Maximum	**0.94**
Zn Average:	**88.08**
Zn Maximum:	**89.12**

Comments:

LAND APPLICATION SITE INFORMATION FOR
CORVALLIS WWRP
OR002636-1

Monitoring Year:	**2006**		
Site Name:	**OSU, (SOAP CREEK RANCH)**	Site No:	**75**
Hydrologic Unit:			
Owner:	**OREGON STATE UNIVERSITY**		
Operator:	**OSU DEPT. OF ANIMAL SCIEN(**		
Applier:	**CITY OF CORVALLIS**		
Latitude:		Longitude:	
Location:			
Section:	**24**		
Township:	**T10S**	Range:	**R5W**
Size (acres):	**34.07**	Size (hectares):	**13.79**
Crop:	**GRASS HAY**		
Application Rate (tons/acre):	**4.77**	Application Rate (MT/HA):	**10.70**

	English Units		Metric Units	
Recommended N for Crop	**100.00**	lbs/Acre	**112.00**	Kg/Ha
Nitrogen Available:	**26.27**	lbs/Dry Ton	**63.84**	Kg/Metic Ton
Total Biosolids Applied:	**162.62**	Dry Tons	**147.53**	Dry Metric Tons
Actual Application Rate:	**4.77**	Dry Tons/Acre	**10.70**	Dry Metric Tons / Ha
Total Recommended N:	**3,407.00**	lbs/field	**1,545.39**	Kg/Field
Total Applied N:	**4,281.96**	lbs/field	**1,942.26**	Kg/Field
% of Recommended N:	**125.68**	%	**125.68**	%
Total P Applied:	**487.64**	lbs/field	**221.19**	Kg/Field
Total K Applied:	**840.67**	lbs/field	**381.32**	Kg/Field

LAND APPLICATION SITE INFORMATION FOR CORVALLIS WWRP OR002636-1

Individual Load Tracking

Haul # / Desc	Date Hauled	Date Applied	Gallons	% Total Solids	Wet Tons	Dry Tons	lbs N / load	lbs N / DT	lbs P / load	lbs P / DT	lbs K / load	lbs K / DT
6565/1	8/2/02	8/2/02	39,200.00	4.70	163.46	7.68	189.38	24.65	322.68	42.00	29.19	3.80
6565/2	8/7/02	8/7/02	44,800.00	5.30	186.82	9.90	244.07	24.65	415.85	42.00	37.62	3.80
6565/3	8/8/02	8/8/02	44,800.00	5.10	186.82	9.53	234.86	24.65	400.16	42.00	36.20	3.80
6565/4	8/9/02	8/9/02	16,800.00	6.10	70.06	4.27	105.34	24.65	179.48	42.00	16.24	3.80
6565/5	8/12/02	8/12/02	44,800.00	5.30	186.82	9.90	244.07	24.65	415.85	42.00	37.62	3.80
6565/6	8/13/02	8/13/02	44,800.00	5.30	186.82	9.90	244.07	24.65	415.85	42.00	37.62	3.80
6565/7	8/14/02	8/14/02	44,800.00	5.20	186.82	9.71	254.81	26.23	272.00	28.00	27.20	2.80
6565/8	8/15/02	8/15/02	44,800.00	5.10	186.82	9.53	249.91	26.23	266.77	28.00	26.68	2.80
6565/9	8/16/02	8/16/02	33,600.00	5.70	140.11	7.99	209.48	26.23	223.62	28.00	22.36	2.80
6565/10	8/19/02	8/19/02	44,800.00	5.90	186.82	11.02	289.11	26.23	308.62	28.00	30.86	2.80
6565/11	8/20/02	8/20/02	5,600.00	5.80	23.35	1.35	35.53	26.23	37.92	28.00	3.79	2.80
6575/2	8/7/02	8/7/02	44,800.00	5.30	186.82	9.90	244.07	24.65	415.85	42.00	37.62	3.80
6575/3	8/8/02	8/8/02	39,200.00	5.10	163.46	8.34	205.50	24.65	350.14	42.00	31.68	3.80
6575/4	8/9/02	8/9/02	22,400.00	6.10	93.41	5.70	140.45	24.65	239.31	42.00	21.65	3.80
6575/5	8/12/02	8/12/02	44,800.00	5.30	186.82	9.90	244.07	24.65	415.85	42.00	37.62	3.80
6575/6	8/13/02	8/13/02	39,200.00	5.30	163.46	8.66	213.56	24.65	363.87	42.00	32.92	3.80
6575/7	8/14/02	8/14/02	44,800.00	5.20	186.82	9.71	254.81	26.23	272.00	28.00	27.20	2.80
6575/8	8/15/02	8/15/02	39,200.00	5.10	163.46	8.34	218.67	26.23	233.43	28.00	23.34	2.80
6575/9	8/20/02	8/20/02	5,600.00	5.80	23.35	1.35	35.53	26.23	37.92	28.00	3.79	2.80
6575/1	8/2/02	8/2/02	33,600.00	4.70	140.11	6.59	162.33	24.65	276.58	42.00	25.02	3.80
6565/4	8/29/05	8/29/05	33,600.00	4.50	140.11	6.31	153.97	24.42	20.18	3.20	35.31	5.60
6565/5	8/30/05	8/30/05	39,200.00	3.40	163.46	5.56	135.72	24.42	17.78	3.20	31.12	5.60
6565/6	8/31/05	8/31/05	16,800.00	4.10	70.06	2.87	70.14	24.42	9.19	3.20	16.08	5.60
6575/1	9/2/05	9/2/05	39,200.00	4.00	163.46	6.54	159.67	24.42	20.92	3.20	36.62	5.60
6575/2	9/6/05	9/6/05	39,200.00	4.50	163.46	7.36	179.63	24.42	23.54	3.20	41.19	5.60
6575/3	9/7/05	9/7/05	39,200.00	5.40	163.46	8.83	215.56	24.42	28.25	3.20	49.43	5.60
6575/4	9/8/05	9/8/05	39,200.00	5.60	163.46	9.15	223.54	24.42	29.29	3.20	51.26	5.60
6575/5	9/12/05	9/12/05	39,200.00	4.60	163.46	7.52	183.62	24.42	24.06	3.20	42.11	5.60
6575/6	9/13/05	9/13/05	39,200.00	4.10	163.46	6.70	163.66	24.42	21.45	3.20	37.53	5.60
6575/7	9/14/05	9/14/05	33,600.00	5.50	140.11	7.71	188.18	24.42	24.66	3.20	43.15	5.60
6565/1	8/24/05	8/24/05	22,400.00	6.20	93.41	5.79	141.42	24.42	18.53	3.20	31.85	5.50
6565/2	8/25/05	8/25/05	39,200.00	5.90	163.46	9.64	235.52	24.42	30.86	3.20	54.01	5.60
6565/3	8/26/05	8/26/05	39,200.00	5.30	163.46	8.66	211.56	24.42	27.72	3.20	48.52	5.60
6565/1	8/15/06	8/15/06	11,200.00	4.40	46.70	2.05	52.22	25.41	4.81	2.34	10.07	4.90
6565/2	8/18/06	8/18/06	33,600.00	6.40	140.11	8.97	227.86	25.41	20.98	2.34	43.94	4.90
6565/3	8/21/06	8/21/06	44,800.00	5.00	186.82	9.34	237.35	25.41	21.86	2.34	45.77	4.90
6565/4	8/22/06	8/22/06	44,800.00	4.40	186.82	8.22	218.98	26.64	26.47	3.22	43.24	5.26
6565/5	8/23/06	8/23/06	44,800.00	4.90	186.82	9.15	243.86	26.64	29.48	3.22	48.15	5.26
6565/6	8/24/06	8/24/06	39,200.00	4.40	163.46	7.19	191.61	26.64	23.16	3.22	37.83	5.26
6565/7	8/25/06	8/25/06	39,200.00	4.50	163.46	7.36	195.96	26.64	23.69	3.22	38.69	5.26
6565/8	8/28/06	8/28/06	39,200.00	4.30	163.46	7.03	187.25	26.64	22.63	3.22	36.97	5.26
6565/9	8/29/06	8/29/06	39,200.00	4.80	163.46	7.85	209.02	26.64	25.26	3.22	41.27	5.26
6565/10	8/30/06	8/30/06	44,800.00	4.80	186.82	8.97	238.89	26.64	28.87	3.22	47.17	5.26
6565/11	8/31/06	8/31/06	39,200.00	4.10	163.46	6.70	178.54	26.64	21.58	3.22	35.25	5.26
6575/1	8/14/06	8/14/06	5,600.00	4.40	23.35	1.03	26.11	25.41	2.40	2.34	5.03	4.90
6575/2	8/15/06	8/15/06	11,200.00	4.40	46.70	2.05	52.22	25.41	4.81	2.34	10.07	4.90
6575/3	8/18/06	8/18/06	39,200.00	6.40	163.46	10.46	265.83	25.41	24.48	2.34	51.26	4.90
6575/4	8/21/06	8/21/06	33,600.00	5.00	140.11	7.01	178.01	25.41	16.39	2.34	34.33	4.90
6575/5	8/22/06	8/22/06	39,200.00	4.40	163.46	7.19	191.61	26.64	23.16	3.22	37.83	5.26
6575/6	8/23/06	8/23/06	39,200.00	4.90	163.46	8.01	213.38	26.64	25.79	3.22	42.13	5.26
6575/7	8/24/06	8/24/06	44,800.00	4.40	186.82	8.22	218.98	26.64	26.47	3.22	43.24	5.26
6575/8	8/25/06	8/25/06	39,200.00	4.50	163.46	7.36	195.96	26.64	23.69	3.22	38.69	5.26
6575/9	8/28/06	8/28/06	39,200.00	4.30	163.46	7.03	187.25	26.64	22.63	3.22	36.97	5.26
6575/10	8/29/06	8/29/06	39,200.00	4.80	163.46	7.85	209.02	26.64	25.26	3.22	41.27	5.26
6575/11	8/30/06	8/30/06	39,200.00	4.80	163.46	7.85	209.02	26.64	25.26	3.22	41.27	5.26
6575/12	8/31/06	8/31/06	33,600.00	4.10	140.11	5.74	153.04	26.64	18.50	3.22	30.22	5.26

LAND APPLICATION SITE INFORMATION FOR
CORVALLIS WWRP
OR002636-1

Avg % Total Solids:	4.98
Total Gallons:	2,004,800.00
Total Dry Tons:	414.54
Gallons / Acre:	58,843.56

Total Cumulative Metal Loading (Kg/Hectare)

As Average:	0.48
As Maximum:	0.53
Cd Average:	0.26
Cd Maximum	0.28
Cu Average:	46.43
Cu Maximum	49.56
Pb Average:	4.16
Pb Maximum	4.75
Hg Average:	0.13
Hg Maximum	0.21
Mo Average:	0.70
Mo Maximum	0.84
Ni Average:	2.35
Ni Maximum:	2.67
Se Average:	0.77
Se Maximum	0.94
Zn Average:	88.08
Zn Maximum:	89.12

Comments:

LAND APPLICATION SITE INFORMATION FOR
CORVALLIS WWRP
OR002636-1

Monitoring Year:	**2006**		
Site Name:	**OSU, (SOAP CREEK RANCH)**	Site No:	**76**
Hydrologic Unit:			
Owner:	**OREGON STATE UNIVERSITY**		
Operator:	**OSU DEPT. OF ANIMAL SCIEN(**		
Applier:	**CITY OF CORVALLIS**		
Latitude:		Longitude:	
Location:			
Section:	**23/24**		
Township:	**T10S**	Range:	**R5W**
Size (acres):	**48.43**	Size (hectares):	**19.60**
Crop:	**GRASS HAY**		
Application Rate (tons/acre):	**4.14**	Application Rate (MT/HA):	**9.27**

	English Units		Metric Units	
Recommended N for Crop	**100.00**	lbs/Acre	**112.00**	Kg/Ha
Nitrogen Available:	**21.77**	lbs/Dry Ton	**52.90**	Kg/Metic Ton
Total Biosolids Applied:	**200.36**	Dry Tons	**181.77**	Dry Metric Tons
Actual Application Rate:	**4.14**	Dry Tons/Acre	**9.27**	Dry Metric Tons / Ha
Total Recommended N:	**4,843.00**	lbs/field	**2,196.75**	Kg/Field
Total Applied N:	**4,430.76**	lbs/field	**2,009.76**	Kg/Field
% of Recommended N:	**91.49**	%	**91.49**	%
Total P Applied:	**867.09**	lbs/field	**393.31**	Kg/Field
Total K Applied:	**1,038.05**	lbs/field	**470.85**	Kg/Field

LAND APPLICATION SITE INFORMATION FOR CORVALLIS WWRP OR002636-1

Individual Load Tracking

Haul # / Desc	Date Hauled	Date Applied	Gallons	% Total Solids	Wet Tons	Dry Tons	lbs N / load	lbs N / DT	lbs P / load	lbs P / DT	lbs K / load	lbs K / DT
6565/1	7/17/02	7/17/02	16,800.00	5.10	70.06	3.57	93.64	26.21	128.62	36.00	12.15	3.40
6565/2	7/18/02	7/18/02	39,200.00	5.20	163.46	8.50	222.79	26.21	306.00	36.00	28.90	3.40
6565/3	7/19/02	7/19/02	28,000.00	5.00	116.76	5.84	153.01	26.21	210.17	36.00	19.85	3.40
6565/4	7/22/02	7/22/02	44,800.00	4.70	186.82	8.78	216.44	24.65	368.77	42.00	33.37	3.80
6565/5	7/23/02	7/23/02	44,800.00	4.70	186.82	8.78	216.44	24.65	368.77	42.00	33.37	3.80
6565/6	7/24/02	7/24/02	44,800.00	4.90	186.82	9.15	225.65	24.65	384.47	42.00	34.79	3.80
6565/7	7/25/02	7/25/02	44,800.00	5.00	186.82	9.34	230.25	24.65	392.31	42.00	35.50	3.80
6565/8	7/26/02	7/26/02	33,600.00	5.20	140.11	7.29	179.60	24.65	306.00	42.00	27.69	3.80
6565/9	7/29/02	7/29/02	44,800.00	5.00	186.82	9.34	230.25	24.65	392.31	42.00	35.50	3.80
6565/10	7/30/02	7/30/02	44,800.00	5.10	186.82	9.53	234.86	24.65	400.16	42.00	36.20	3.80
6565/11	7/31/02	7/31/02	44,800.00	5.10	186.82	9.53	234.86	24.65	400.16	42.00	36.20	3.80
6565/12	8/1/02	8/1/02	39,200.00	4.70	163.46	7.68	189.38	24.65	322.68	42.00	29.19	3.80
6575/1	7/17/02	7/17/02	16,800.00	5.10	70.06	3.57	93.64	26.21	128.62	36.00	12.15	3.40
6575/2	7/18/02	7/18/02	39,200.00	5.20	163.46	8.50	222.79	26.21	306.00	36.00	28.90	3.40
6575/3	7/19/02	7/19/02	44,800.00	5.00	186.82	9.34	244.82	26.21	336.27	36.00	31.76	3.40
6575/4	7/22/02	7/22/02	28,000.00	4.70	116.76	5.49	135.27	24.65	230.48	42.00	20.85	3.80
6575/5	7/23/02	7/23/02	44,800.00	4.70	186.82	8.78	216.44	24.65	368.77	42.00	33.37	3.80
6575/6	7/24/02	7/24/02	44,800.00	4.90	186.82	9.15	225.65	24.65	384.47	42.00	34.79	3.80
6575/7	7/25/02	7/25/02	33,600.00	5.00	140.11	7.01	172.69	24.65	294.24	42.00	26.62	3.80
6575/8	7/26/02	7/26/02	39,200.00	5.20	163.46	8.50	209.53	24.65	357.01	42.00	32.30	3.80
6575/9	7/29/02	7/29/02	44,800.00	5.00	186.82	9.34	230.25	24.65	392.31	42.00	35.50	3.80
6575/10	7/30/02	7/30/02	44,800.00	5.10	186.82	9.53	234.86	24.65	400.16	42.00	36.20	3.80
6575/11	7/31/02	7/31/02	44,800.00	5.10	186.82	9.53	234.86	24.65	400.16	42.00	36.20	3.80
6575/12	11/19/02	11/19/02	44,800.00	4.70	186.82	8.78	216.44	24.65	368.77	42.00	33.37	3.80
6565/1	7/5/05	7/5/05	5,600.00	7.00	23.35	1.63	39.92	24.42	5.23	3.20	8.99	5.50
6565/2	7/6/05	7/6/05	39,200.00	7.00	163.46	11.44	279.43	24.42	36.62	3.20	64.08	5.60
6565/3	7/7/05	7/7/05	44,800.00	3.30	186.82	6.16	150.55	24.42	19.73	3.20	34.52	5.60
6565/4	7/12/05	7/12/05	39,200.00	4.80	163.46	7.85	191.61	24.42	25.11	3.20	43.94	5.60
6565/5	7/13/05	7/13/05	39,200.00	5.10	163.46	8.34	203.58	24.42	26.68	3.20	46.69	5.60
6565/6	7/14/05	7/14/05	39,200.00	4.00	163.46	6.54	159.67	24.42	20.92	3.20	36.62	5.60
6565/7	7/15/05	7/15/05	39,200.00	5.40	163.46	8.83	215.56	24.42	28.25	3.20	49.43	5.60
6565/8	7/19/05	7/19/05	39,200.00	5.70	163.46	9.32	227.53	24.42	29.82	3.20	52.18	5.60
6565/9	7/20/05	7/20/05	44,800.00	5.20	186.82	9.71	237.23	24.42	31.09	3.20	54.40	5.60
6565/10	7/21/05	7/21/05	33,600.00	5.70	140.11	7.99	195.03	24.42	25.56	3.20	44.72	5.60
6565/11	7/22/05	7/22/05	39,200.00	5.10	163.46	8.34	203.58	24.42	26.68	3.20	46.69	5.60
6565/12	7/25/05	7/25/05	39,200.00	4.80	163.46	7.85	191.61	24.42	25.11	3.20	43.94	5.60
6565/13	7/26/05	7/26/05	39,200.00	4.00	163.46	6.54	159.67	24.42	20.92	3.20	36.62	5.60
6565/14	7/27/05	7/27/05	11,200.00	3.90	46.70	1.82	44.48	24.42	5.83	3.20	10.20	5.60
6575/1	8/8/05	8/8/05	11,200.00	4.40	46.70	2.05	50.18	24.42	6.58	3.20	11.51	5.60
6575/2	8/11/05	8/11/05	33,600.00	6.30	140.11	8.83	215.56	24.42	28.25	3.20	49.43	5.60
6575/3	8/12/05	8/12/05	39,200.00	4.40	163.46	7.19	175.64	24.42	23.02	3.20	40.28	5.60
6565/15	8/15/05	8/15/05	39,200.00	5.10	163.46	8.34	203.58	24.42	26.68	3.20	46.69	5.60
6575/4	8/16/05	8/16/05	39,200.00	4.60	163.46	7.52	183.62	24.42	24.06	3.20	42.11	5.60
6565/16	8/17/05	8/17/05	5,600.00	4.60	23.35	1.07	26.23	24.42	3.44	3.20	6.02	5.60
6575/5	8/17/05	8/17/05	33,600.00	4.60	140.11	6.45	157.39	24.42	20.62	3.20	36.09	5.60
6565/17	8/18/05	8/18/05	28,000.00	6.30	116.76	7.36	179.63	24.42	23.54	3.20	41.19	5.60
6565/18	8/19/05	8/19/05	39,200.00	5.30	163.46	8.66	211.56	24.42	27.72	3.20	48.52	5.60
6565/19	8/22/05	8/22/05	39,200.00	4.50	163.46	7.36	179.63	24.42	23.54	3.20	41.19	5.60
6565/20	8/23/05	8/23/05	39,200.00	4.50	163.46	7.36	179.63	24.42	23.54	3.20	41.19	5.60
6565/21	8/24/05	8/24/05	16,800.00	6.20	70.06	4.34	106.07	24.42	13.90	3.20	24.32	5.60
6565/1	7/24/06	7/14/06	11,200.00	2.70	46.70	1.26	28.37	22.50	36.06	28.60	6.83	5.42
6565/2	7/25/06	7/25/06	28,000.00	4.10	116.76	4.79	64.77	13.53	40.12	8.38	28.24	5.90
6565/3	7/26/06	7/26/06	39,200.00	4.50	163.46	7.36	99.53	13.53	61.64	8.38	43.40	5.90
6565/4	7/27/06	7/27/06	33,600.00	5.70	140.11	7.99	108.06	13.53	66.93	8.38	47.12	5.90
6565/5	7/28/06	7/28/06	22,400.00	5.60	93.41	5.23	70.77	13.53	43.83	8.38	30.86	5.90
6565/6	7/31/06	7/31/06	22,400.00	4.00	93.41	3.74	50.55	13.53	31.31	8.38	22.04	5.90

LAND APPLICATION SITE INFORMATION FOR CORVALLIS WWRP OR002636-1

6565/7	8/1/06	8/1/06	33,600.00	4.00	140.11	5.60	142.41	25.41	13.11	2.34	27.46	4.90
6565/8	8/2/06	8/2/06	33,600.00	4.40	140.11	6.16	156.65	25.41	14.43	2.34	30.21	4.90
6565/9	8/3/06	8/3/06	39,200.00	4.60	163.46	7.52	191.07	25.41	17.60	2.34	36.84	4.90
6565/10	8/4/06	8/4/06	39,200.00	4.60	163.46	7.52	191.07	25.41	17.60	2.34	36.84	4.90
6565/11	8/7/06	8/7/06	39,200.00	5.10	163.46	8.34	211.83	25.41	19.51	2.34	40.85	4.90
6565/12	8/8/06	8/8/06	39,200.00	4.40	163.46	7.19	182.76	25.41	16.83	2.34	35.24	4.90
6565/13	8/9/06	8/9/06	28,000.00	5.40	116.76	6.31	160.21	25.41	14.75	2.34	30.89	4.90
6565/14	8/10/06	8/10/06	39,200.00	5.70	163.46	9.32	236.76	25.41	21.80	2.34	45.66	4.90
6565/15	8/11/06	8/11/06	39,200.00	5.50	163.46	8.99	228.45	25.41	21.04	2.34	44.05	4.90
6565/16	8/14/06	8/14/06	33,600.00	4.40	140.11	6.16	156.65	25.41	14.43	2.34	30.21	4.90
6575/1	7/24/06	7/24/06	11,200.00	2.70	46.70	1.26	28.37	22.50	36.06	28.60	6.83	5.42
6575/2	7/25/06	7/25/06	33,600.00	4.10	140.11	5.74	77.72	13.53	48.14	8.38	33.89	5.90
6575/3	7/27/06	7/27/06	33,600.00	5.70	140.11	7.99	108.06	13.53	66.93	8.38	47.12	5.90
6575/4	7/28/06	7/28/06	28,000.00	5.60	116.76	6.54	88.47	13.53	54.79	8.38	38.58	5.90
6575/5	7/31/06	7/31/06	33,600.00	4.00	140.11	5.60	75.83	13.53	46.97	8.38	33.07	5.90
6575/6	8/1/06	8/1/06	33,600.00	4.00	140.11	5.60	142.41	25.41	13.11	2.34	27.46	4.90
6575/7	8/2/06	8/2/06	33,600.00	4.40	140.11	6.16	156.65	25.41	14.43	2.34	30.21	4.90
6575/8	8/3/06	8/3/06	33,600.00	4.60	140.11	6.45	163.77	25.41	15.08	2.34	31.58	4.90
6575/9	8/4/06	8/4/06	33,600.00	4.60	140.11	6.45	163.77	25.41	15.08	2.34	31.58	4.90
6575/10	8/7/06	8/7/06	33,600.00	5.10	140.11	7.15	181.57	25.41	16.72	2.34	35.01	4.90
6575/11	8/8/06	8/8/06	39,200.00	4.40	163.46	7.19	182.76	25.41	16.83	2.34	35.24	4.90
6575/12	8/9/06	8/9/06	33,600.00	5.40	140.11	7.57	192.25	25.41	17.70	2.34	37.07	4.90
6575/13	8/10/06	8/10/06	39,200.00	5.70	163.46	9.32	236.76	25.41	21.80	2.34	45.66	4.90
6575/14	8/11/06	8/11/06	33,600.00	5.50	140.11	7.71	195.81	25.41	18.03	2.34	37.76	4.90
6575/15	8/14/06	8/14/06	33,600.00	4.40	140.11	6.16	156.65	25.41	14.43	2.34	30.21	4.90

Avg % Total Solids:	**4.89**
Total Gallons:	**2,805,600.00**
Total Dry Tons:	**574.09**
Gallons / Acre:	**57,931.03**

Total Cumulative Metal Loading (Kg/Hectare)

As Average:	**0.48**
As Maximum:	**0.53**
Cd Average:	**0.26**
Cd Maximum	**0.28**
Cu Average:	**46.43**
Cu Maximum	**49.56**
Pb Average:	**4.16**
Pb Maximum	**4.75**
Hg Average:	**0.13**
Hg Maximum	**0.21**
Mo Average:	**0.70**
Mo Maximum	**0.84**
Ni Average:	**2.35**
Ni Maximum:	**2.67**
Se Average:	**0.77**
Se Maximum	**0.94**
Zn Average:	**88.08**
Zn Maximum:	**89.12**

Comments:

APPENDIX B

SITE AUTHORIZATION LETTERS

Oregon
John A. Kitzhaber, M.D., Governor

Department of Environmental Quality
Western Region
Salem Office
750 Front St. NE
Suite 120
Salem, OR 97310
(503) 378-8240
(503) 378-3684 TTY

May 5, 1999

Dan Hanthorn
Wastewater Operations Supervisor
City of Corvallis
Post Office Box 1083
Corvallis, OR 97339

RE: WQ/SDS-City of Corvallis
NPDES No. 100984
File No. 20151
Biosolids Land Application Authorization
Corvallis Airport Site
T12S; R5W; Sec 22,27,28, 33,34 -900 acres
Benton County

Dear Mr. Hanthorn:

The Department of Environmental Quality (Department) reevaluated your request for authorization to land apply anaerobically digested biosolids from the Corvallis Wastewater Treatment Plant (WWTP) onto the Corvallis City property (referenced above). The site was initially approved by the Department on March 8, 1990, and biosolids have been beneficially used on the site since then to supply nutrients for grass seed. The re-evaluation was based upon updated maps of individual fields and current Biosolids analysis.

Based upon the Department's evaluation of the information submitted; your request to use the property is approved for the application of anaerobically digested biosolids from the City of Corvallis from April 15th to October 15th of each year provided:

1. Solids processing and handling will comply with Oregon sludge rules and guidelines (OAR 340-50-005 to OAR 340-50-080) and all other applicable statutes, rules, and federal regulations;

2. Sludge volatile solids shall be reduced by 38% or more via anaerobic digestion prior to land spreading;

3. Prior to land application, the biosolids must meet one of the three pathogen reduction standards required under 40 CFR 503.32(b);

4. Based on the City's most recent biosolids analysis, existing crop, topographic, and soil conditions of the field, 100 pounds of available nitrogen per acre, per year 4.4 dry tons per acre, can be applied. Changes in biosolids characteristics or cropping practices will necessitate appropriate adjustments in the annual application rate to maintain nitrogen loadings consistent with crop demands;

5. If other sources of nitrogen will be applied to the fields, the biosolids application rate must be reduced so that commercial fertilizer nitrogen, animal manure, or green manure nitrogen, plus biosolids nitrogen, do not exceed the agronomic loading rate of any field within the site;

6. The City's truck operator shall immediately clean up any spillage of biosolids. Spillage which cannot be completely cleaned up must be covered with dry lime and posted where appropriate;

7. The DEQ Salem Office ((503) 378-8240) shall be notified within one hour of any biosolids spills greater than 50 gallons, or other threats to the environment that may occur. Spills that occur after normal working hours shall be reported to the Emergency Management Division (EMD) within one hour. The telephone number of EMD is 1-800-452-0311;

8. A 50-foot minimum (300 feet minimum if biosolids gun application is used) setback shall be maintained between biosolids application areas and all highways, public roadways, and property lines;

9. A minimum setback of 200 feet shall be maintained between biosolids application areas and all wells and other water sources;

10. A minimum setback of 50 feet shall be maintained from seasonal drainage ways;

11. Biosolids shall be applied evenly and thinly in a manner that will prevent ponding and runoff. No Biosolids shall be applied, when within the prior 24 hours, 0.25 inches of rain or greater has fallen in the Corvallis area;

12. No food crops for direct human consumption, whose harvested parts are grown below ground shall be planted on any biosolids amended area for at least 38 months following biosolids land spreading;

13. No food chain crops for direct human consumption, whose harvested parts are grown above ground (e.g., tomatoes) shall be grown on any biosolids amended area for at least 14 months following biosolids land spreading;

14. A 30-day fallow period shall follow the application of biosolids prior to grazing livestock on any biosolids amended field or harvesting animal feed crops from biosolids amended areas;

15. Public access to field sites shall be restricted for at least 12 months after biosolids land spreading has ceased;

16. In the event an odor problem is reported at any land application site, immediate steps, such as, but not limited to, the addition of liming materials, must be taken to counteract that condition;

17. The City shall maintain daily records for the biosolids land application site which indicate (on a field map grid system) where, when, and how many (gallons) biosolids were land applied to the specific fields on the property to verify that annual loading limitations are not being exceeded;

18. Site records shall indicate the date, location and amount of biosolids applied;

19. The Department shall have the right to enter the Corvallis' WWTP's place of record keeping to review biosolids management operations and records, obtain copies of any records required under the terms of this authorization and the WWTP's biosolids (sludge) management plan, inspect any monitoring equipment required under this authorization, inspect any collection, transport, or land spreading vehicles, and obtain any photographic documentation or evidence deemed appropriate;

20. The City shall provide DEQ an annual summary of biosolids processing and land application activities;

21. The Department may impose, at a future date, additional restrictions or conditions deemed necessary to assure adequate biosolids management. Any variations from the City's (DEQ approved) biosolids management plan and this authorization letter must receive prior written approval from the Western Region - Salem Office; and,

22. This authorization is subject to revocation should health hazards, environmental degradation, or nuisance conditions develop as a result of inadequate solids treatment or site management. If operations are not conducted in accordance with terms specified under this authorization, the Department will initiate necessary remedial action.

If you have any questions regarding this authorization, please contact me at (503) 378-8240, extension 236.

Sincerely,

Tom Fisher
Environmental Specialist
Western Region-Salem Office

TRF:clp

x:\tfisher\CorvallissaBA
cc: Doug Peters, Municipal Wastewater Section
Dept of Environmental Quality

Oregon
Theodore Kulongoski, Governor

Department of Environmental Quality
Western Region Eugene Office
165 East 7th Avenue, suite 100
Eugene, OR 97401
(541) 687-7439
FAX (541) 686-7551

PUBLIC WORKS
JAN 07 2011

Janaury 5, 2011

Gene Freel, Wastewater Operator
Wastewater Regional Plant
City of Corvallis
1245 NE 3rd Street
P.O. Box 1083
Corvallis OR 97339

Phone ((541) 754-1757

Re: File Number: 20151
Permit Number: 101714
City of Corvallis Biosolid Land Application Site Reauthorization
WR-2010-0017-BS
Lloyd Anderson property owner, Anderson Farms
4210 NW Crescent Valley Dr., Corvallis OR 97330
Twp. 11S, R. 5 W. Sec. 14 Tax Lot
Parcel total approx. 36 acres
Benton County

Dear Mr. Gene Freel:

Based on the current property owner's approval, this letter represents approval of your request to land apply Class B Biosolid on the above referenced property. This biosolid authorization is good until the property ownership changes, the farming management/practices change such that there is significant non-compliance with the biosolid rules (threat to public health or the environment), or the current property owner requests the city to discontinue the land application of biosolid on this site. This authorization is subject to revocation through a contested hearing process by the Department if significant noncompliance issues arise.

This authorization to apply biosolids the above referenced property is subject to criteria detailed in the Oregon Administrative Rules, Chapter 340, Division 50 and the following conditions:

Responsibility:

It is the responsibility of the City of Corvallis to insure the proper handling and application of all biosolids generated. Transportation of the biosolids to the application site shall be done in such a manner as to prevent leaking or spilling the biosolids onto the highways, streets, roads, waterways or other land surfaces not approved for biosolids application.

Site Use Limitations:

1. Controlled access to the biosolids site must be maintained for a period of 12 months following biosolids application.

2. Grazing of domestic animals should not be allowed on this site for 30 days following the last day biosolids were land applied on this site. There is a 90 day grazing restriction for lactating animals (dairy cattle).

Accidental Spillage:

The permittee shall immediately clean up any spillage of biosolids and notify the DEQ Roseburg office at 440-3338 of any such occurrences. Call Oregon Emergency Response System (ORES) at 1-800- 452-0311 for any spills that make it to or could make it to waters of the state. Spillage which cannot be completely cleaned up shall be covered with hydrated lime (Calcium Hydroxide) or lime (calcium oxide). A 50-lb. bag of liming material shall remain available during transportation of the biosolids.

Monitoring:

1. Written daily land application records shall be kept on a field grid map or other easily readable system. Corvallis is responsible for tracking the land application of biosolids on daily basis (number of dry pounds nitrogen land applied per acre). Corvallis shall provide the DEQ with monthly summaries of biosolids land application activities along with a current biosolids analysis in Corvallis' annual report.

2. A copy of the current year's biosolid analysis should be carried with all biosolids that are to be land applied at this site.

3. A copy of this site authorization letter and a signed biosolid pathogen and vector attraction reduction certification statement should accompany all biosolids land applied at this site. The responsible parties who apply biosolids should review the site authorization letter prior to land applying biosolids to this site

4. If this site is used 2 out 3 consecutive years (loaded at agronomic rates) then a soil carry over nitrogen test is required for those fields in question prior to the end of the third year.

If you have any questions regarding this approval, please call me at (541) 687-7439.

Sincerely,

Paul Kennedy

Paul Kennedy
Natural Resource Specialist 3

Cc: Portland-DEQ Biosolid Program
Marion County Health Department

6/11/96

Oregon

DEPARTMENT C
ENVIRONMENTA
QUALITY

Western Region -
Salem Office

June 14, 1996

Michael K. Clark
City of Corvallis
Wastewater Treatment Plant
Post Office Box 1083
Corvallis, OR 97339

Re: WQ/SDS-City of Corvallis
Bressler Farm
Section 35; TL 12S; R5W
Benton County
Biosolids Land Application
Authorization

Dear Mr. Clark:

The Department of Environmental Quality (Department) has evaluated your request for authorization to land apply anaerobically digested biosolids from the Corvallis Wastewater Treatment Plant (WWTP) onto the Bressler Farm referenced above. The biosolids will supply nutrients for 35 acres of hay. Material you submitted with the biosolids land application site authorization request included information characterizing soils, topography, biosolids, crop, crop management, annual available nitrogen loading (agronomic loading rate), and a copy of a signed agreement regarding the use of biosolids.

Based upon our evaluation of the information submitted, your request to use the property is approved for dry weather (May through October) applications of anaerobically digested biosolids from the City provided:

1. Solids processing and handling will comply with Oregon Sludge Rules and Guidelines (OAR 340-50-005 to OAR 340-50-080) and all other applicable statutes, rules, and Federal regulations;

2. Sludge volatile solids shall be reduced by 38% or more via anaerobic digestion prior to land spreading;

3. Prior to land application, the biosolids must meet one of the three pathogen reduction standards required under 40 CFR 503.32(b);

750 Front St. NE
Suite 120
Salem, OR 97310
(503) 378-8240
(503) 378-3684 TDD

4. Based on the City's most recent biosolids analysis, existing crop, topographic, and soil conditions of the field, 100 pounds of available nitrogen per acre, per year (7.85 dry tons per acre) can be applied. Changes in biosolids characteristics or cropping practices will necessitate appropriate adjustments in the annual application rate to maintain nitrogen loadings consistent with crop demands;

5. If other sources of nitrogen will be applied to the fields, the biosolids application rate must be reduced so that commercial fertilizer nitrogen, animal manure, or green chop nitrogen, plus biosolids nitrogen, do not exceed the agronomic loading rate of any field within the site;

6. The City's truck operator shall immediately clean up any spillage of biosolids. Spillage which cannot be completely cleaned up must be covered with dry lime and posted where appropriate;

7. The Western Region-Salem Office (503-378-8240) shall be notified within one hour of any biosolids spills greater than 50 gallons, or other threats to the environment that may occur. Spills that occur after normal working hours shall be reported to the Emergency Management Division (EMD) within one hour. The telephone number of EMD is 1-800-452-0311;

8. A 50 foot minimum (75 feet minimum if biosolids gun application is used) setback shall be maintained between biosolids application areas and all highways, public roadways, and property lines;

9. A minimum setback of 200 feet shall be maintained between biosolids application areas and all wells and other water sources;

10. Biosolids shall be applied evenly and thinly in a manner that will prevent ponding and runoff;

11. No food crops for direct human consumption, whose harvested parts are grown below ground, shall be planted on any biosolids amended area for at least 38 months following biosolids land spreading;

12. No food chain crops for direct human consumption, whose harvested parts are grown above ground (e.g., tomatoes), shall be grown on any biosolids amended area for at least 14 months following biosolids land spreading;

13. A 30-day fallow period shall follow the application of biosolids prior to grazing livestock on any biosolids amended field or harvesting animal feed crops from biosolids amended areas;

14. Public access to fields site shall be restricted for at least 12 months after biosolids land spreading has ceased;

15. In the event an odor problem is reported at any land application site, immediate steps, such as, but not limited to, the addition of liming materials, must be taken to counteract that condition;

16. The City shall maintain daily records for the biosolids land application site which indicate (on a field map grid system) where, when, and how much (gallons) biosolids were land applied to the specific fields on the property to verify that annual loading limitations are not being exceeded;

17. Site records shall indicate the date, location, and amount of biosolids applied; segments of each field that received biosolids, sludge, pounds of nutrients, arsenic, cadmium, chromium, copper, lead, mercury, molybdenum, nickel, selenium and zinc applied to each area receiving biosolids; and the type of crop grown. This data shall be maintained at the WWTP for a minimum of five (5) years and be made available to the Department for review upon request;

18. The Department shall have the right to enter the Corvallis WWTP's place of recordkeeping to review biosolids management operations and records; obtain copies of any records required under the terms of this authorization and the WWTP's biosolids (sludge) management plan; inspect any monitoring equipment required under this authorization; inspect any collection, transport, or land spreading vehicles; and obtain any photographic documentation or evidence deemed appropriate;

19. The City shall provide DEQ an annual summary of biosolids processing and land application activities;

20. The Department may impose, at a future date, additional restrictions or conditions deemed necessary to assure adequate biosolids management. Any variations from the City's DEQ approved biosolids management plan, and this authorization letter must receive prior written approval from the Western Region-Salem Office; and,

21. This authorization is subject to revocation should health hazards, environmental degradation, or nuisance conditions develop as a result of inadequate solids treatment or site management. If operations are not conducted in accordance with terms specified under this authorization, the Department will initiate necessary remedial action.

If you have any questions regarding this authorization, please contact me at (503) 378-8240, extension 236.

Sincerely,

Tom Fisher
Environmental Specialist
Western Region-Salem Office

TRF:lmd
x:\tfisher\corvalli

cc: Doug Peters, Municipal Wastewater Section, DEQ
Scott Bressler, 28078 Payne Road, Corvallis, OR 97333

RECEIVED
JUN 21 1995
PUBLIC WORKS

Oregon

DEPARTMENT OF ENVIRONMENTAL QUALITY

Western Region - Salem Office

June 20, 1995

Dan R. Hanthorn
Wastewater Operations Manager
P.O.Box 1083
Corvallis, OR 97339

Re: WQ/SDS-City of Corvallis
Grey Farm
Section 24/13; TL 10S; R 4/5 W
Benton County
Sludge Land Application Authorization

Dear Mr. Hanthorn:

The Department has evaluated your request for authorization to land apply anaerobically digested biosolids from the Corvallis Wastewater Treatment Plant (WWTP) onto the Grey Farm referenced above. The biosolids will supply nutrients for 180 acres of grass pasture. Material you submitted with the biosolids land application site authorization request included information characterizing soils, topography, biosolids, crop, crop management, annual available nitrogen loading (agronomic loading rate), site life, and a copy of a signed agreement regarding the use of biosolids.

Based upon our evaluation of the information submitted, your request to use the property is approved for dry weather (May through October) applications of anaerobically digested biosolids from the City, provided:

1. Solids processing and handling will comply with Oregon Sludge Rules and Guidelines (OAR 340-50-005 to OAR 340-50-080) and all other applicable statutes, rules, and Federal regulations;

2. Sludge volatile solids shall be reduced by 38% or more via anaerobic digestion prior to land spreading;

3. Prior to land application, the biosolids must meet one of the three pathogen reduction standards required under 40 CFR 503.32(b);

4. Based on the City's most recent biosolids analysis, existing crop, topographic, and soil conditions of the field, 100 pounds of available nitrogen per acre, per year (3.6 dry tons per acre) can be applied. Changes in biosolids characteristics or cropping practices will necessitate appropriate adjustments in the annual application rate to maintain nitrogen loadings consistent with crop demands;

750 Front St. NE
Suite 120
Salem, OR 97310
(503) 378-8240
(503) 378-3684 TDD

5. If other sources of nitrogen will be applied to the fields, the biosolids application rate must be reduced so that commercial fertilizer nitrogen, animal manure, or green chop nitrogen, plus biosolids nitrogen, do not exceed the agronomic loading rate of any field within the site;

6. The City's truck operator shall immediately clean up any spillage of biosolids. Spillage which cannot be completely cleaned up must be covered with dry lime and posted where appropriate;

7. The Western Region-Salem Office (503-378-8240) shall be notified within one hour of any biosolids spills greater than 50 gallons, or other threats to the environment that may occur. Spills that occur after normal working hours shall be reported to the Emergency Management Division (EMD) within one hour. The telephone number of EMD is 1-800-452-0311;

8. [redacted] (75 feet minimum if biosolids gun application is used) setback shall be maintained between biosolids application areas and [redacted]

9. A minimum setback of [redacted] shall be maintained between [redacted] areas and all [redacted]

10. Biosolids shall be applied evenly and thinly in a manner that will prevent ponding and runoff;

11. Because the runoff potential of fields is high, [redacted] or the ground is frozen. An interval of at least three days shall occur between heavy periods of precipitation and biosolids land application;

12. No food crops for direct human consumption, whose harvested parts are grown below ground, shall be planted on any biosolids amended area for at least 38 months following biosolids land spreading;

13. No food chain crops for direct human consumption, whose harvested parts are grown above ground (e.g., tomatoes), shall be grown on any biosolids amended area for at least 14 months following biosolids land spreading;

14. A 30-day fallow period shall follow the application of biosolids prior to grazing livestock on any biosolids amended field or harvesting animal feed crops from biosolids amended areas;

15. Public access to fields site shall be restricted for at least 12 months after biosolids land spreading has ceased;

16. In the event an odor problem is reported at any land application site, immediate steps, such as, but not limited to, the addition of liming materials, must be taken to counteract that condition;

17. The City shall maintain daily records for the biosolids land application site which indicate (on a field map grid system) where, when, and how much (gallons) biosolids were land applied to the specific fields on the property to verify that annual loading limitations are not being exceeded;

18. Site records shall indicate the date, location, and amount of biosolids applied; segments of each field that received biosolids, sludge, pounds of nutrients, arsenic, cadmium, chromium, copper, lead, mercury, molybdenum, nickel, selenium and zinc applied to each area receiving biosolids; and the type of crop grown. These data shall be maintained at the WWTP for a minimum of five (5) years and be made available to the Department for review upon request;

19. The Department shall have the right to enter the Corvallis' WWTP's place of record keeping to review biosolids management operations and records; obtain copies of any records required under the terms of this authorization and the WWTP's biosolids (sludge) management plan; inspect any monitoring equipment required under this authorization; inspect any collection, transport, or land spreading vehicles; and obtain any photographic documentation or evidence deemed appropriate;

20. The City shall provide DEQ an annual summary of biosolids processing and land application activities;

21. The Department may impose, at a future date, additional restrictions or conditions deemed necessary to assure adequate biosolids management. Any variations from the City's DEQ approved biosolids management plan, and this authorization letter must receive prior written approval from the Western Region-Salem Office; and,

22. This authorization is subject to revocation should health hazards, environmental degradation, or nuisance conditions develop as a result of inadequate solids treatment or site management. If operations are not conducted in accordance with terms specified under this authorization, the Department will initiate necessary remedial action.

If you have any questions regarding this authorization, please contact me at (503) 378-8240, extension 236.

Sincerely,

Tom Fisher
Environmental Specialist
Western Region-Salem Office

TRF:klw
x:\trf\corvalli

cc: Bijan Pour, Municipal Wastewater Section
Dennis Grey, 39247 Rifle Range Road, Corvallis, OR 97339

Oregon
John A. Kitzhaber, M.D., Governor

Department of Environmental Quality
Western Region – Salem Office
750 Front St. NE, Ste. 120
Salem, OR 97301-1039
(503) 378-8240
(503) 378-3684 TTY

August 6, 1999

Dan Hanthorn
Wastewater Operations Supervisor
City of Corvallis
Post Office Box 1083
Corvallis, OR 97339

RECEIVED
AUG 16 1999
PUBLIC WORKS

Re: WQ/SDS-City of Corvallis
NPDES # 100984
Biosolids Land Application
OSU, OSU Dept. of Animal Science Authorization
Sec, 23,24,25,26; TL10S;R5W
Field # 70-22.81 acres; Field # 75- 33.41 acres; Field # 76-43.94 acres
Field # 77- 32.21 acres; Field # 78 46.36 acres; Field # 80-42.25 acres
Benton County

Dear Mr. Hanthon:

The Department of Environmental Quality (Department) evaluated your request for authorization to land apply anaerobically digested biosolids from the Corvallis Wastewater Treatment Plant (WWTP) onto the OSU farm (referenced above). The biosolids will supply nutrients for grass hay/pasture. Material you submitted with the biosolids land application site authorization request included: information characterizing soils, topography, biosolids, crop, crop management, annual available nitrogen loading (agronomic loading rate), site life, and a copy of a signed agreement regarding the use of the Bioslids.

During my December 10, 1998 review I found inclusions of poorly drained soils on all six fields listed above, therefore application of Biosolids is permitted only from April 15 to October 15 of each year.

Based upon the Department's evaluation of the information submitted your request to use the property is approved for the application of anaerobically digested biosolids from the City of Corvallis (City) provided:

1. Solids processing and handling will comply with Oregon sludge rules and guidelines (OAR 340-50-005 to OAR 340-50-080) and all other applicable statutes, rules, and federal regulations;

2. Sludge volatile solids shall be reduced by 38% or more via anaerobic digestion prior to land spreading;

3. Prior to land application, the biosolids must meet one of the three pathogen reduction standards required under 40 CFR 503.32(b);

4. Based on the City's most recent biosolids analysis, existing crop, topographic, and soil conditions of the field, 100 pounds of available nitrogen per acre, per year (3.7 dry tons per acre, can be applied. Changes in biosolids characteristics or cropping practices will necessitate appropriate adjustments in the annual application rate to maintain nitrogen loadings consistent with crop demands.

5. If other sources of nitrogen will be applied to the fields, the biosolids application rate must be reduced so that commercial fertilizer nitrogen, animal manure, or green manure nitrogen, plus biosolids nitrogen, do not exceed the agronomic loading rate of any field within the site;

6. The City's truck operator shall immediately clean up any spillage of biosolids. Spillage which cannot be completely cleaned up must be covered with dry lime and posted where appropriate;

7. The DEQ Salem Office ((503) 378-8240) shall be notified within one hour of any biosolids spills greater than 50 gallons, or other threats to the environment that may occur. Spills that occur after normal working hours shall be reported to the Emergency Management Division (EMD) within one hour. The telephone number of EMD is 1-800-452-0311;

8. A 50-foot minimum (300 feet minimum if biosolids gun application is used) setback shall be maintained between biosolids application areas and all highways, public roadways, and property lines.

9. A minimum setback of 200 feet shall be maintained between biosolids application areas and all wells and other water sources.

10. A minimum setback of 50 feet shall be maintained from seasonal drainage ways and 100 feet from Soap Creek.

11. Biosolids shall be applied evenly and thinly in a manner that will prevent ponding and runoff. No Biosolids shall be applied, when within the prior 24 hours, 0.25 inches of rain or greater has fallen in the Corvallis area;

12. No food crops for direct human consumption, whose harvested parts are grown below ground shall be planted on any biosolids amended area for at least 38 months following biosolids land spreading;

13. No food chain crops for direct human consumption, whose harvested parts are grown above ground (e.g., tomatoes) shall be grown on any biosolids amended area for at least 14 months following biosolids land spreading;

14. A 30-day fallow period shall follow the application of biosolids prior to grazing livestock on any biosolids amended field or harvesting animal feed crops from biosolids amended areas;

15. Public access to field sites shall be restricted for at least 12 months after biosolids land spreading has ceased;

16. In the event an odor problem is reported at any land application site, immediate steps, such as, but not limited to, the addition of liming materials, must be taken to counteract that condition;

17. The City shall maintain daily records for the biosolids land application site which indicate (on a field map grid system) where, when, and how many (gallons) biosolids were land applied to the specific fields on the property to verify that annual loading limitations are not being exceeded;

18. Site records shall indicate the date, location and amount of biosolids applied;

19. The Department shall have the right to enter the Corvallis' WWTP's place of record keeping to review biosolids management operations and records; obtain copies of any records required under the terms of this authorization and the WWTP's biosolids (sludge) management plan; inspect any monitoring equipment required under this authorization; inspect any collection, transport, or land spreading vehicles; and obtain any photographic documentation or evidence deemed appropriate;

20. The City shall provide DEQ an annual summary of biosolids processing and land application activities;

21. The Department may impose, at a future date, additional restrictions or conditions deemed necessary to assure adequate biosolids management. Any variations from the City's (DEQ approved) biosolids management plan and this authorization letter must receive prior written approval from the Western Region - Salem Office;

22. All neighbors residing around the site must be notified prior to the proposed Biosolids application. Records of this notification must be kept on file with the land application site log. and,

23. This authorization is subject to revocation should health hazards, environmental degradation, or nuisance conditions develop as a result of inadequate solids treatment or site management. If operations are not conducted in accordance with terms specified under this authorization, the Department will initiate necessary remedial action.

If you have any questions regarding this authorization, please contact me at 378-8240, extension 236.

Sincerely,

Tom Fisher
Environmental Specialist
Western Region-Salem Office

TRF:sms
x:\tfisher\Corvallissa
cc: Doug Peters, Municipal Wastewater Section
Scott Faxton, OSU Dept of Animal Science, Withycombe Hall Corvallis, OR 97339

August 25, 1992

Oregon

DEPARTMENT OF ENVIRONMENTAL QUALITY

Willamette Valley Region

Dan Hanthorn
City of Corvallis
Wastewater Treatment Plant
P.O. Box 1083
Corvallis, OR 97339

RECEIVED
AUG 2 6 1992
PUBLIC WORKS

Re: WQ-SDS; City of Corvallis; Sludge Land Application Authorization; Gary Sander Site; T.L. 00500, Sec. 2, T13S., R,6W, W.M., Benton County; File No. 20151

Dear Mr. Hanthorn:

Regional staff evaluated the Sander site on August 24, 1992, to determine if the site would be suitable for the land application of anaerobically digested sludge from the Corvallis WWTP. At that time you provided us with a request for authorization to land apply solids to a 75 acre christmas tree site on the property (referenced above), which included information characterizing soils, topography, sludge, crop, crop management, annual available nitrogen loading (agronomic loading rate) and site life, and a signed agreement between the City and Gary and Audrey Sanders.

It is our understanding that the frequency of application to this site will be limited to one application every five (5) years.

Based upon our evaluation of the site, and the information submitted, I am pleased to advise you that the property described above is approved for summer use only (June 1-September 30) application of digested sewage sludge from the City provided:

1. Sludge processing and handling will comply with Oregon sludge rules and guidelines (OAR 340-50-005 to OAR 340-50-080) and all other applicable statutes, rules and federal regulations.

2. Sludge volatile solids shall be reduced by 38% or more via aerobic digestion prior to land spreading.

3. Based on the City's most recent sludge analysis, existing crop, topographic and soil conditions of the field, up to 100 pounds of available nitrogen [19,845 gallons or 8.5 dry tons of biosolids per acre per year] can be applied to areas of the field acceptable for receiving solids. Changes in sludge characteristics or cropping practices will necessitate appropriate adjustments in the application rate to maintain nitrogen loadings consistent with crop demands.

BARBARA ROBERTS
Governor

750 Front St. NE
Suite 120
Salem, OR 97310
(503) 378-8240

4. If other sources of nitrogen will be applied to the field, the sludge application rate must be reduced so that commercial, animal manure or green chop nitrogen, plus sludge nitrogen, does not exceed the agronomic loading rate of any field within the site.

5. Based upon sludge analytical data reported under the City's proposal, the solids land application site has a cumulative loading capacity of 235 dry tons per acre. Cadmium is the sludge constituent that limits the number of dry tons solids that may be land applied.

6. Sludge land spreading shall be via tanker with a spreader gate.

7. Immediately following land spreading, the sludge tanker operator shall wash down (at the application site) areas of equipment coated with sludge to prevent sludge from leaking onto public highways.

8. The City's truck operator shall clean up any spillage of sludge. Spillages which cannot be completely cleaned up must be covered with dry lime and posted where appropriate.

9. The Willamette Valley Region Office shall be notified within one hour of any spills of more than 50 gallons, or other threats to the environment that may occur. Failure to provide notification within one hour may be considered cause for taking enforcement action against the City. Spills that occur after normal working hours shall be reported to the Emergency Management Division (EMD) within one hour. The telephone number of EMD is 1-800-452-0311;

10. A 50 foot (minimum), (75 feet minimum where sludge cannon is used), setback shall be maintained from any county road or state highway and points of sludge application.

11. A minimum setback of 200 feet shall be maintained from all wells and other water sources.

12. Sludge shall be applied evenly and thinly in a manner that will prevent ponding and runoff.

13. Areas where sludge has been applied shall be clearly marked by flag pins or stakes which note the date when sludge was last applied or the permittee shall keep accurate daily records of the exact location of daily loads.

14. No food crops (for direct human consumption) whose harvested parts are grown below ground shall be planted on any sludge amended area for at least 60 months following sludge land spreading.

15. No food chain crops (for direct human consumption) whose harvested parts are grown above ground (e.g., tomatoes) shall be grown on any sludge amended area for at least 18 months following sludge land spreading.

16. A 30-day fallow period shall follow the application of sludge prior to grazing livestock on any field or feeding harvested crops from sludge areas to animals.

17. Public access to the site shall be restricted for at least 12 months after sludge land spreading has ceased.

18. In the event an odor problem is reported to the Department after sludge has been land spread at the Sander Site, immediate steps, such as, but not limited to, the addition of liming materials, must be taken to counteract that condition.

19. The City shall maintain daily records for the sludge land application site which indicate (on a field map grid system) where, when, and how much (gallons) sludge was land applied to a particular site.

20. Site records shall indicate the date, location and amount of sludge applied, segments of each field that received sludge, pounds of nutrients, cadmium, copper, lead, nickel, and zinc applied to each area receiving sludge, and the type of crop grown. These data shall be maintained at WWTP and be made available to the Department for review upon request.

21. The Department shall have the right to, (at reasonable times); enter City of Corvallis WWTP's place of record keeping to review sludge management operations and records; obtain copies of any records required under the terms of this authorization and the WWTP's sludge management plan; inspect any monitoring equipment required under this authorization; inspect any collection, transport, or land spreading vehicles and obtain any photographic documentation or evidence deemed appropriate.

22. The City shall provide DEQ a monthly summary of sludge processing and land application activities on DMR's required under the sewage treatment facility's NPDES permit.

23. The Department may impose any additional restrictions or conditions deemed necessary to assure adequate sludge management. Any variations from the City's DEQ approved sludge management plan, and this authorization letter, must receive prior written approval from the Willamette Valley Region Office.

24. This authorization is subject to revocation should health hazards, environmental degradation, or nuisance conditions develop as a result of inadequate sludge treatment or site management. This authorization is considered to be part of your approved sludge management plan. Therefore, if operations are not conducted in accordance with terms specified under this authorization, the Department will initiate an enforcement action which may lead to the assessment of a civil penalty.

If you have any questions regarding this authorization, please contact me at 378-8240.

Sincerely,

Joe Petrovich

Joe Petrovich
Environmental Specialist
Willamette Valley Region

JAP:bkb

X:\JAP\Corvall.sds

Enc: (1) Beneficial Use Application
(2) Annual Solids Production Summary

cc: Gary & Audrey Sander, 24274 Neuman Road, Corvallis, OR 97339
Mark Ronayne, WQ w/att

Oregon
John A. Kitzhaber, M.D., Governor

Department of Environmental Quality
Western Region
Salem Office
750 Front St. NE
Suite 120
Salem, OR 97310
(503) 378-8240
(503) 378-3684 TTY

May 5, 1999

Dan Hanthorn
Wastewater Operations Supervisor
City of Corvallis
Post Office Box 1083
Corvallis, OR 97339

RE: WQ/SDS-City of Corvallis
NPDES No. 100984
File No. 20151
Biosolids Land Application Authorization
Corvallis Dedicated Disposal Site
T13S; R6W; Sec 10 -27.38 acres
Benton County

Dear Mr. Hanthon:

The Department of Environmental Quality (Department) reevaluated your request for authorization to land apply anaerobically digested biosolids from the Corvallis Wastewater Treatment Plant (WWTP) onto the Corvallis City property (referenced above). The site was initially approved by the Department on August 29, 1990, and biosolids have been beneficially used on the site since then to supply nutrients for grass hay. The reevaluation was based upon updated maps of individual fields and current Biosolids analysis.

Based upon the Department's evaluation of the information submitted; your request to use the property is approved for the application of anaerobically digested biosolids from the City of Corvallis from April 15th to October 15th of each year provided:

1. Solids processing and handling will comply with Oregon sludge rules and guidelines (OAR 340-50-005 to OAR 340-50-080) and all other applicable statutes, rules, and federal regulations;

2. Sludge volatile solids shall be reduced by 38% or more via anaerobic digestion prior to land spreading;

3. Prior to land application, the biosolids must meet one of the three pathogen reduction standards required under 40 CFR 503.32(b);

4. Based on the City's most recent biosolids analysis, existing crop, topographic, and soil conditions of the field, 100 pounds of available nitrogen per acre, per year 4.4 dry tons per acre, can be applied. Changes in Biosolids characteristics or cropping practices will necessitate appropriate adjustments in the annual application rate to maintain nitrogen loadings consistent with crop demands;

5. If other sources of nitrogen will be applied to the fields, the biosolids application rate must be reduced so that commercial fertilizer nitrogen, animal manure, or green manure nitrogen, plus biosolids nitrogen, do not exceed the agronomic loading rate of any field within the site;

6. The City's truck operator shall immediately clean up any spillage of biosolids. Spillage which cannot be completely cleaned up must be covered with dry lime and posted where appropriate;

7. The DEQ Salem Office ((503) 378-8240) shall be notified within one hour of any biosolids spills greater than 50 gallons, or other threats to the environment that may occur. Spills that occur after normal working hours shall be reported to the Emergency Management Division (EMD) within one hour. The telephone number of EMD is 1-800-452-0311;

8. A 50-foot minimum (300 feet minimum if biosolids gun application is used) setback shall be maintained between biosolids application areas and all highways, public roadways, and property lines;

9. A minimum setback of 200 feet shall be maintained between biosolids application areas and all wells and other water sources;

10. A minimum setback of 50 feet shall be maintained from seasonal drainage ways;

11. Biosolids shall be applied evenly and thinly in a manner that will prevent ponding and runoff. No Biosolids shall be applied, when within the prior 24 hours, 0.25 inches of rain or greater has fallen in the Corvallis area;

12. No food crops for direct human consumption, whose harvested parts are grown below ground shall be planted on any biosolids amended area for at least 38 months following biosolids land spreading;

13. No food chain crops for direct human consumption, whose harvested parts are grown above ground (e.g., tomatoes) shall be grown on any biosolids amended area for at least 14 months following biosolids land spreading;

14. A 30-day fallow period shall follow the application of biosolids prior to grazing livestock on any biosolids amended field or harvesting animal feed crops from biosolids amended areas;

15. Public access to field sites shall be restricted for at least 12 months after biosolids land spreading has ceased;

16. In the event an odor problem is reported at any land application site, immediate steps, such as, but not limited to, the addition of liming materials, must be taken to counteract that condition;

17. The City shall maintain daily records for the biosolids land application site which indicate (on a field map grid system) where, when, and how many (gallons) biosolids were land applied to the specific fields on the property to verify that annual loading limitations are not being exceeded;

18. Site records shall indicate the date, location and amount of biosolids applied;

19. The Department shall have the right to enter the Corvallis' WWTP's place of record keeping to review biosolids management operations and records, obtain copies of any records required under the terms of this authorization and the WWTP's biosolids (sludge) management plan, inspect any monitoring equipment required under this authorization; inspect any collection, transport, or land spreading vehicles, and obtain any photographic documentation or evidence deemed appropriate;

20. The City shall provide DEQ an annual summary of biosolids processing and land application activities;

21. The Department may impose, at a future date, additional restrictions or conditions deemed necessary to assure adequate biosolids management. Any variations from the City's (DEQ approved) biosolids management plan and this authorization letter must receive prior written approval from the Western Region - Salem Office; and,

22. This authorization is subject to revocation should health hazards, environmental degradation, or nuisance conditions develop as a result of inadequate solids treatment or site management. If operations are not conducted in accordance with terms specified under this authorization, the Department will initiate necessary remedial action.

If you have any questions regarding this authorization, please contact me at (503) 378-8240, extension 236.

Sincerely,

Tom Fisher
Environmental Specialist
Western Region-Salem Office

TRF:clp

x:\tfisher\CorvallissaBDS
cc: Doug Peters, Municipal Wastewater Section
Dept of Environmental Quality

Oregon
Theodore Kulongoski, Governor

Department of Environmental Quality
Western Region CORVALLIS Office
725 SE Main
CORVALLIS, OR 97470
(541) 440-3338
FAX (541) 440-3396

Received
JAN 10 2008
PUBLIC WORKS

August 31, 2007

Daniel Hanthorn, Wastewater Operation s Supervisor
Wastewater Regional Plant
City of Corvallis
1245 NE 3rd Street
P.O. Box 1083
Corvallis OR 97339

File Number: 20151
Phone ((541) 754-1757

RE: WQ-S-Benton County
Biosolid Land Application (approx. 100 acres)
Twp. 12S, R.4W, Sec. 23 W.M. Tax Lot
Property Owner: Jack and Penny Pimm
30854 Abraham Dr.
Halsey OR 97348

Dear Mr. Daniel Hanthorn:

Based on the current property owner's approval, this letter represents approval of your request to land apply biosolid on the above referenced property. This biosolid authorization is good until the property ownership changes, the farming management/practices change such that there is significant non-compliance with the biosolid rules (threat to public health or the environment), or the current property owner requests the city to discontinue the land application of biosolid on this site. This authorization is subject to revocation through a contested hearing process by the Department if significant noncompliance issues arise.

This authorization to apply biosolids the above referenced property is subject to criteria detailed in the Oregon Administrative Rules, Chapter 340, Division 50 and the following conditions:

Responsibility:
It is the responsibility of the City of Corvallis to insure the proper handling and application of all biosolids generated. Transportation of the biosolids to the application site shall be done in such a manner as to prevent leaking or spilling the biosolids onto the highways, streets, roads, waterways or other land surfaces not approved for biosolids application.

Site Description:
The site is located near Halsey, Oregon. The Pimm property is approximately 117 acres of grass fields, of which about 100 acres can be used for biosolid land application at this time. The biosolid application site is comprised mostly of Amity silty clay loam, Concord silty clay loam, and Woodburn silt loam soils. This site is only those portions of this parcel that is shaded on the enclosed map.

Based upon an evaluation of this property the Department is pleased to authorize the City to land apply stabilized biosolids subject to the conditions under your National Pollutant Discharge Elimination (NPDES) permit and the following stipulations:

1. This site is approved for summer application (June 1 through Oct. 31) of biosolids. During biosolid land application, care should be taken to avoid wet soil conditions, which may have occurred as a result of precipitation, especially in low and concave areas.

2. No liquid biosolids shall be applied on slopes greater than 12 percent, No cake biosolid shall be applied on slopes greater than 30 percent.

3. Biosolids shall be applied evenly at approved agronomic rate and in a manner to prevent ponding or runoff.

4. Biosolids shall not be applied closer than 10'for cake and 50' feet for liquid to any low access public property or road way, 50' to any drainage ditch, channel, pond, or waterway, or within 200 feet of a domestic water source or well.

5. For biosolid land application there is a minimum 48" setback from the ground surface and the permanent soil water table at these fields. Prior to land application of biosolids each year the permanent soil water table depths must be checked and a daily written recorded kept. Once the soil water table depths at these fields respectively have dropped below 48" from the ground surface the water table measurements can cease; should the groundwater table rise above 48" then daily water table depth shall be monitored for setback land application compliance.

6. Biosolid application rate shall not exceed approximately 140 lb. Plant Available Nitrogen (PAN) /acre/year. Changes in the biosolids characteristics or crops management may necessitate appropriate adjustments in the biosolid application rate to maintain proper plant available nitrogen for desired crop growth.

7. If other sources of nitrogen are used, the biosolids application rate must be reduced so that irrigation of reclaimed water or commercial nitrogen in combination with biosolids nitrogen does not exceed base agronomic loading rate of this site (140 lb. PAN/acre/years). Note Nitrogen loading rate may be adjusted to account for multiple grass crop harvests (see condition 6 above).

Site Use Limitations:

1. Controlled access to the biosolids site must be maintained for a period of 12 months following biosolids application.

2. Grazing of domestic animals should not be allowed on this site for 30 days following the last day biosolids were land applied on this site. There is a 90 day grazing restriction for lactating animals (dairy cattle).

DEQ-DC1

Accidental Spillage:
The permittee shall immediately clean up any spillage of biosolids and notify the DEQ Roseburg office at 440-3338 of any such occurrences. Call Oregon Emergency Response System (ORES) at 1-800- 452-0311 for any spills that make it to or could make it to waters of the state. Spillage which cannot be completely cleaned up shall be covered with hydrated lime (Calcium Hydroxide) or lime (calcium oxide). A 50-lb. bag of liming material shall remain available during transportation of the biosolids.

Monitoring:
1. Written daily land application records shall be kept on a field grid map or other easily readable system. Corvallis is responsible for tracking the land application of biosolids on daily basis (number of dry pounds nitrogen land applied per acre). Corvallis shall provide the DEQ with monthly summaries of biosolids land application activities along with a current biosolids analysis in Corvallis' annual report.

2. A copy of the current year's biosolid analysis should be carried with all biosolids that are to be land applied at this site.

3. A copy of this site authorization letter and a signed biosolid pathogen and vector attraction reduction certification statement should accompany all biosolids land applied at this site. The responsible parties who apply biosolids should review the site authorization letter prior to land applying biosolids to this site

4. If this site is used 2 out 3 consecutive years then a soil carry over nitrogen test is required for those fields in question prior to the end of the third year.

If you have any questions regarding this approval, please call me at (541) 440-3338, ext. 228.

Sincerely,

Paul Kennedy

Paul Kennedy
Natural Resource Specialist 3

Cc: Judy Johndohl, Portland-DEQ Biosolid Program
Tim McFetridge, Salem DEQ-WQ
Benton County Department of Environmental Health
Jack and Penny Pimm, Property Owner

DEQ-DC1

APPENDIX C

DEQ BIOSOLIDS MANAGEMENT RULES AND GUIDANCE

RECEIVED
NOV 16 1995

AMENDMENTS TO
OREGON ADMINISTRATIVE RULES

OAR 340
DIVISION 50

LAND APPLICATION OF DOMESTIC WASTEWATER TREATMENT FACILITY BIOSOLIDS, BIOSOLIDS DERIVED PRODUCTS, AND DOMESTIC SEPTAGE

CONTENTS

OAR Number	Title	Page
	Oregon Administrative Rules	
340-50-005	Purpose	2
340-50-006	Policy	3
340-50-010	Definitions	3
340-50-015	Permit or License Required	5
340-50-020	Responsibility	7
340-50-025	Limitations and Restricted Uses	7
340-50-026	General Standards	8
340-50-030	Biosolids and Domestic Septage Land Application Site Selection and Approval	9
340-50-031	Biosolids and Domestic Septage Management Plans	10
340-50-032	Biosolids Facilities Plans and Specifications	12
340-50-035	Monitoring, Recordkeeping, and Reporting	13
	Best Management Practices for Site Selection and the Use and Application of Bulk Biosolids and Domestic Septage	
340-50-060	Purpose	15
340-50-065	Use Limitations	15
340-50-070	Criteria for Site Selection and Approval	16
340-50-080	Application of Biosolids and Domestic Septage	17

PURPOSE

340-50-005

(1) It is the purpose of these rules and best management practices to protect the environment and public health in Oregon by prescribing the methods, procedures and restrictions required for the safe handling and use of domestic wastewater treatment facility solids, biosolids, biosolids derived products, and domestic septage. These rules implement a program for biosolids and domestic septage management which satisfies or exceeds minimum federal regulations pertaining to land application.

(2) Industrial process water solids , agricultural wastes and sewerage wastewater are not included in these rules.

POLICY

340-50-006

The Environmental Quality Commission (EQC) encourages the land application of treated domestic wastewater biosolids, biosolids derived products, and domestic septage which are managed in a manner which protects the public health and maintains or improves environmental quality. These beneficial recyclable materials improve soil tilth, fertility, and stability and their use enhances the growth of agricultural, silvicultural, and horticultural crops.

DEFINITIONS

340-50-010

Unless otherwise indicated in this Division, definitions appearing under federal regulations 40 CFR §503.9, §503.11, and §503.31 shall apply. In addition, as used in these rules, unless differently required by context, the following definitions apply:

(1) ''Agronomic Application Rate'' means a rate of biosolids or domestic septage application which matches nutrient requirements for a specific crop on an annual basis.

(2) ''Beneficial Use Site'' means any Department approved site for application of a regulated amount of biosolids or domestic septage used for crop or livestock production, soil reclamation and stabilization, or soil improvement. Application rates and site management practices shall assure continued

(10) "Dewatered Solids" means domestic wastewater treatment facility solids or biosolids with a solids concentration between ten (10) and fifty (50) percent.

(11) "Domestic Septage" means liquid or solid material removed from a septic tank, cesspool, portable toilet, Type III marine sanitation device, holding tanks, or similar treatment works that receive only domestic wastewater. Domestic septage does not include liquid or solid material removed from a septic tank, cesspool, or similar treatment works that receive either commercial wastewater or industrial wastewater and does not include grease removed from a grease trap at a restaurant.

(12) "Domestic Wastewater" means the water-carried human wastes from residences, buildings, industrial establishments or other places, together with such groundwater infiltration and surface water as may be present that flow to wastewater treatment facilities.

(13) "Dried Solids" means domestic wastewater treatment facility solids or biosolids with a solids concentration of greater than fifty (50) percent accomplished by mechanical means or air drying .

(14) "Exceptional Quality Biosolids" means domestic wastewater treatment facility solids containing trace pollutant concentrations which are below federal alternative pollutant limits recognized under 40 CFR §503.13(b)(3) that have been treated by a Class A pathogen reduction process recognized under 40 CFR §503.32(a) and one of the vector attraction reduction procedures established under 40 CFR §503.33(b)(1) through (8). These solids are recognized as soil amendments which are acceptable for distribution and marketing to the public.

(15) "Federal Regulations" means Part 503 Standards for the Use or Disposal of Sewage Sludge, Subchapter O in Chapter I of Title 40 of the Code of Federal Regulations (§503).

(16) "Liquid Biosolids" means domestic wastewater treatment facility biosolids with a solids concentration of less than ten (10) percent.

(17) "Non-Digested Solids" means raw domestic primary, secondary, or advanced wastewater treatment facility solids, or solids that have accumulated in a digester which is either not operating efficiently or has not provided adequate time or temperature for digestion to occur; a lagoon where settled solids have not decomposed to the extent that they comply with 40 CFR §503.32 pathogen or 40 CFR §503.33 vector attraction reduction requirements; or a septic tank process whose function is confinement and/or separation of liquids and solids.

biosolids, or domestic septage, shall have in their possession a valid NPDES or WPCF permit issued pursuant to ORS 468B.050.

(3) Persons who land apply either Bulk Class B biosolids derived from sources outside Oregon or alkaline stabilized domestic septage shall first obtain a valid WPCF permit obtained pursuant to ORS 468B.050.

(4) Permit or license issuance or renewal applicants shall submit a biosolids or domestic septage management plan to the Department developed pursuant to OAR 340-50-031. No plan shall be approved by the Department unless, at a minimum, the plan demonstrates compliance with all requirements specified under OAR 340-50-026.

(5) Conditions in Department biosolids and septage management plan approvals and site authorization letters may be appealed to the Commission pursuant to ORS Chapter 183 and OAR Chapter 340, Division 11. Appeals shall be limited to topics pertaining to Department approved biosolids or septage management plan or site authorization letters.

(6) Any person operating a sewage disposal service business shall comply with all license conditions required under Department approved septage management plans.

(7) Where biosolids will be land applied during the term of a permit, permit applications submitted to the Department shall include a land application plan developed pursuant to 40 CFR §501.15 and OAR 340-50-031(7).

(8) Biosolids management and land application plans shall be subject to review and comment during the public participation process required prior to permit issuance or renewal under OAR 340-14-025, OAR 340-45-035, or OAR 340-71-162.

(9) All conditions contained in Department approved biosolids or septage management plan approval and site authorization letters are considered permit requirements.

(10) Except as otherwise required by this Division, the permitting provisions in 40 CFR Part 122; 40 CFR Part 501; OAR Chapter 340, Division 14; OAR Chapter 340, Division 45; and OAR Chapter 340, Division 71 are applicable.

GENERAL STANDARDS

340-50-026

(1) Unless the Department determines that the context requires otherwise, all general provisions of 40 CFR §503.1 through §503.9 and land application requirements in 40 CFR §503.10 through §503.18 are applicable for the purpose of this rule.

(2) To be considered acceptable for land application, biosolids or domestic septage shall meet:

(a) Pollutant concentration and cumulative pollutant loading limits required under 40 CFR §503.13. *(Note: not required for domestic septage.);*

(b) One of the pathogen reduction standards established under 40 CFR §503.32;

(c) One of the vector attraction reduction standards required under 40 CFR §503.33; and

(d) Management practices required under 40 CFR §503.14 and 40 CFR §503.32(b)(5).

(3) In addition to meeting pollutant concentration and loading limits required under 40 CFR §503.13, biosolids derived products must meet federal Class A pathogen reduction standards pursuant to 40 CFR §503.32(a) and one of the vector attraction reduction standards required under 40 CFR §503.33(b)(1) through (8).

(4) Biosolids imports must meet the following criteria:

(a) 40 CFR §503.13(b)(1), Table 1 pollutant ceiling concentration limits;

(b) One of the 40 CFR §503.32(b) Class B pathogen reduction standards;

(c) One of the 40 CFR §503.33(b)(1) through (8) vector attraction reduction standards;

(d) Minimum biosolids quality requirements of the County, State, or Regional government where they are produced; and

(e) They must be applied within beneficial use (agronomic) rates.

(2) Prior to the approval of any proposed site that may be sensitive with respect to residential housing, runoff potential or threat to groundwater, the Department shall ensure that an opportunity is provided for public comment and, if required as noted in (a) below, public hearing.

(a) If, during the public comment period, at least 10 people, or an organization representing at least 10 people, indicate concerns about the proposed action, then opportunity shall be provided for public hearing.

(b) The Department shall take final action on site authorization within 30 days of the closure of the public comment period, or 30 days of the closure of the hearing's record.

(3) Land application site authorization letters are considered an integral part of the biosolids or domestic septage management plan. Provisions specified by the Department in site authorization letters, in accordance with a Department approved biosolids or domestic septage management plan, shall be considered enforceable conditions under the permitted source's NPDES, WPCF, or Solid Waste Disposal permit.

BIOSOLIDS AND DOMESTIC SEPTAGE MANAGEMENT PLANS

340-50-031

(1) Any person who intends to land apply biosolids or domestic septage shall submit a solids management plan to the Department for review and approval. Unless otherwise authorized in writing by the Department, solids management plans shall be submitted a minimum of sixty (60) days before biosolids land application commences.

(2) Provisions established in Department approved biosolids or domestic septage management plans shall be considered NPDES, WPCF, or Solid Waste Disposal permit conditions.

(3) The biosolids or domestic septage management plan shall be kept current and remain on file with the permit or license. Plan modification requires written Department approval.

(4) Septage management plans must address the quantities of septages handled annually, types of septage processed, solid storage facilities, and solids land application or disposal facilities.

(l) A description of biosolids or domestic septage land application site monitoring, recordkeeping, and reporting procedures; and

(m) A description of remedial procedures that would be implemented in the event of a solids treatment process failure (e.g., digester breakdown or upset), solids spill at the wastewater treatment facility or solids generating source, or biosolids or domestic septage spill between the generating source and land application site.

(6) New Department authorized sites shall be made a part of the biosolids or domestic septage management plan.

(7) Biosolids Land Application plans shall, at a minimum, list:

(a) All known sites that will receive biosolids during the life of the permit;

(b) The geographic location of new sites which are not specifically listed at the time of application;

(c) Criteria which will be used in the selection of new sites; and

(d) Management practices which will be implemented where new sites are authorized by the Department.

BIOSOLIDS FACILITIES PLANS AND SPECIFICATIONS

340-50-032

(1) Plans and specifications for biosolids or domestic septage impoundments, reservoirs, tanks, or other containment structures proposed for storage may be required by the Department as part of an upgrade or as a permit or solids management plan approval condition.

(2) Detailed plans and specifications for biosolids or septage composting facilities shall, at a minimum, meet requirements included under OAR 340-96-020.

(3) Plans and preliminary engineering reports must be submitted to the Department pursuant to OAR 340-52-015. Written Department approval shall be obtained prior to the construction or use of biosolids or septage storage or composting facilities.

§503.13(b)(2), Table 2 and maintain records adequate to demonstrate that pollutant additions do not exceed Table 2 limits.

(5) Unless otherwise required by the Department, the quality and quantity of biosolids and land application actions shall be reported to the Department at least once annually. The Department may require more frequent reporting on biosolids production, treatment, characteristics, and land application activities. Monthly reporting is not required where exceptional quality biosolids are land applied.

(6) Annually, by February 19, each domestic NPDES, WPCF, and Solid Waste permitted source that has generated and land applied bulk biosolids or domestic septage, or prepared biosolids or biosolids derived products for distribution and marketing during the prior year, shall provide the Department with a comprehensive report that describes solids handling activities for the previous year. At a minimum, the report shall include, but is not limited to:

(a) Data, on each site that received solids, which is adequate to characterize solids quality and to demonstrate that solids were applied within agronomic loading rates and other required site management practices;

(b) Sources generating and applying biosolids that are required to track cumulative pollutant additions pursuant to 40 CFR §503.13(b)(2), Table 2, shall also be required to submit information on annual and cumulative pollutant additions;

(c) Information sufficient to demonstrate that solids met pathogen reduction requirements required under 40 CFR §503.32 and vector attraction reduction standards required under 40 CFR §503.33;

(d) Information describing any substantive modifications to solids handling or land application site management practices;

(e) A detailed description of any violation of 40 CFR §503 or OAR Chapter 340, Division 50 and remedial actions taken to prevent the recurrence of similar violations in the future.

(7) Annually, as a requirement of license renewal, sewage disposal service businesses shall submit information adequate to characterize solids handling activities which occurred during the previous licensing period. Information must include data describing the quantities and varieties of septages handled and locations where solids are used and disposed.

required where Class A biosolids derived products are land applied to sites used for the cultivation of fresh market fruits or vegetables.

(6) Grazing animals should not be allowed on pasture to forage nor should livestock feed crops be harvested where bulk Class B biosolids or domestic septage have been applied for a minimum of thirty (30) days after application.

(7) Exceptional Quality biosolids and biosolids derived products may be used on indoor and outdoor ornamental plants, shrubs, trees, home gardens and lawns, and high public contact areas without restricting public access.

CRITERIA FOR SITE SELECTION AND APPROVAL

340-50-070

(1) Normally, tillable agricultural land is suitable for the land application of biosolids and domestic septage.

(2) To be considered for biosolids or domestic septage land application, sites should meet all the following conditions:

(a) Sites should be on a stable geologic formation not subject to flooding or excessive runoff from adjacent land. If periodic flooding cannot be avoided, the period of application should be restricted and soil incorporation is recommended.

(b) At the time when liquid biosolids or domestic septage are applied, the minimum depth to permanent groundwater should be four (4) feet and the minimum depth to temporary groundwater should be one (1) foot. Sites approved for year-round application should be evaluated carefully to ensure that groundwater separation distances conform with these requirements.

(c) Topography of the site should be suitable to allow normal agricultural operations. Where needed, runoff and erosion control measures should be constructed. In general, liquid biosolids or domestic septage should not be surface applied on bare soils where the ground slope exceeds twelve (12) percent. Well vegetated sites with slopes up to thirty (30) percent may be used for dewatered or dried biosolids, or for liquid biosolids or domestic septage application with appropriate management to prevent runoff.

(2) The application of biosolids or domestic septage on agricultural land should be managed to utilize the fertilizer and organic matter value to the maximum extent possible. The recommended rate of biosolids or domestic septage application is normally based on the nitrogen requirement of the crop grown and will vary depending on the nitrogen content of the solids.

(3) Crop nitrogen requirements are used routinely to determine application rates for commercial fertilizer and these figures are readily available from state or county Extension Service offices. Applying biosolids and domestic septage within these limits helps ensure that solids nitrogen will be utilized for plant growth and that excess nitrogen which could leach into groundwater will not be of concern.

(4) Exceeding crop nitrogen requirements may occasionally be justified on a temporary basis in order to achieve rapid soil improvement or to prolong beneficial effects. Biosolids applications exceeding normal crop nitrogen requirements may be approved on a case-by-case basis for reclamation or soil improvement, if justification for a single high rate application is provided to the Department.

(a) Where a site has previously been amended with biosolids at soil improvement or reclamation rates, documentation of background soil nitrate-nitrogen (NO_3-N) shall be submitted for Department approval prior to the application of additional biosolids;

(b) Soil samples shall be collected and tested according to protocols published by Oregon State University and the American Society of Agronomy.

(5) Sites proposed for routine annual application at agronomic rates must periodically be assessed to determine the impact of nitrogen from biosolids and other sources.

(a) The criteria for requiring evaluation or performance monitoring [e.g., soil testing for carry-over nitrate-nitrogen (NO_3-N)] will be biosolids applications exceeding two (2) out of three (3) successive years at agronomic rates;

(b) Soil samples shall be collected and tested according to protocols published by Oregon State University and the American Society of Agronomy.

Oregon State Department of Environmental Quality
Water Quality Division

Policies for Biosolids Land Application

Biosolids Program Guidance DRAFT

INTRODUCTION

These biosolids policies help implement the Oregon state rule on land application of biosolids, Chapter 340 Division 50 Oregon Administrative Rule. Ten position papers covering these subjects were previously developed with the assistance of the DEQ Domestic Biosolids Technical Advisory Committee. The papers were presented in June 1994 as part of the state biosolids rule revision process, which included adoption by reference of the Environmental Protection Agency (EPA) technical standards in 40 CFR Part 503. The position papers were developed to clarify how to interpret both the new state and federal rules. They served as interim guidance, undergoing field testing for practicality while the new state regulation was implemented during the past two years.

These position papers were reviewed and are the basis for these Dept. of Environmental Quality (DEQ) Biosolids Policies. These guidance documents are being issued in draft form, to supplement the proposed draft biosolids land application rule amendments, and to solicit comments from all interested parties. Notice of these draft documents is being made to the public, the Domestic Biosolids Technical Advisory Committee, the Northwest Biosolids Management Association, and any interested Biosolids Committee or other members of the Oregon Association of Clean Water Agencies. Comments will be addressed and final drafts are then planned to be released together with the amended biosolids rule in 1998.

Prepared by: Douglas L. Peters
Biosolids Coordinator
Policy & Program Development Section
(503) 229-6442 Phone or e-mail to: *peters.douglas@deq.state.or.us*
(503) 229-5408 FAX

6. Cumulative Pollutant Loading 15

Biosolids metals higher than Table 3 values must be tracked at sites 15

Sampling and testing protocols required for testing metals loading rates 15

7. Biosolids Trace Pollutant Forecasting 17

Statistical analyses of data can be used to forecast biosolids quality 17

EPA recommends 95% confidence interval in statistical analyses of biosolids 17

Example of biosolids statistical analysis 18

8. Public Notification 22

All permits are subject to public notification 22

Public notice process by publishing in a newspaper and mailing to list of interested people 22

Biosolids management plans may require separate public notification 22

Land application sites usually not subject to separate public notice 23

Sensitive sites may require public hearing 23

Public notice to adjacent land owners and occupants is recommended 23

9. Winter Biosolids Storage Policy 24

Adequate storage is needed for winter rainy periods and for plant upsets 24

DEQ determines what is adequate storage on a case-by-case basis 24

Guidelines assist in establishing adequate storage 24

Biosolids Storage Guidelines 25

Climatic Factors and Application Indices 29

10. Vector Attraction Reduction - Volatile Solids Reduction 33

VAR must be documented and certified 33

Minimum of seven samples required to determine VAR 33

Monitoring frequency based on quantities produced 33

Samples must be representative 33

Van Kleeck equation 34

Example Calculations for Agronomic Rate Determination

1. Biosolids N concentrations

TKN	Total Kjeldahl Nitrogen	55,000 mg/kg (5.5%)
NH4-N	Ammonium Nitrogen	15,000 mg/kg (1.5%)
NO3-N	Nitrate N	1,000 mg/kg (0.1%)

2. Available N calculations

% inorganic N = (%NH4-N) (.5) + (%NO3-N) = (5.5%)(.5) + (0.1%) = (2.75%) + (0.1%) = 0.85% (using 50% volatilization rate for surface application)

% organic N = (%TKN) - (%NH4-N) = 4.0%

lb mineralized N/dry ton biosolids = (%organic N/100) (mineralization rate/100) (2000) = (4/100)(30/100)(2000) = 24 lb mineralized N/dry ton biosolids (using 30% mineralization rate for anaerobic digestion)

lb inorganic N/dry ton biosolids = (% inorganic N/100)(2000) = (.85)(2000) = 17 lb inorganic N/dry ton biosolids

Total lb available N/dry ton biosolids = lb mineralized N+ lb inorganic N =24+17 = 41 lb available N/dry ton biosolids

3. Biosolids Application Rate

crop N requirement (lb N/acre) / (lb available N/dry ton biosolids) = dry ton biosolids/acre

Example crop: pasture grass/hay requiring 150 lb N/acre

150 lb N/acre / 41 lb available N/dry ton biosolids = 3.66 dry tons biosolids/acre

References are provided on pg. 4 of other publications which discuss methods to calculate agronomic application rates.

References

EPA Sept. 1995, Process Design Manual for Land Application of Sewage Sludge and Domestic Septage, EPA 625/R-95/001.

EPA 1993, Standards for the Use or Disposal of Sewage Sludge, 40 CFR Part 503.

EPA 1992, Technical Support Document for the Land Application of Sewage Sludge, EPA 822/R-93-001a.

D. Sullivan, D. Granatstein, C. Cogger, C. Henry, K. Dorsey, 1993, Biosolids Management Guidelines for Washington State, Washington State Dept. of Ecology Publication 93-80.

A.L. Page et al., 1982, Methods of Soil Analysis, Agronomy No. 9, Part 2.

H.L. Huddleston and M.P. Ronayne, 1995, Guide to Soil Suitability and Site Selection for Beneficial Use of Domestic Wastewater Biosolids, OSU, Manual 8.

D. Sullivan, Jan.1998 projected publishing date, Fertilizing with Biosolids, OSU, information brochure.

C. Henry, D. Sullivan, R. Rynk, K. Dorsey, C. Cogger, M. Van Ham, 1998 projected publishing date, Managing Nitrogen from Biosolids, unpublished manuscript now in process funded by the Washington State Dept. of Ecology and the Northwest Biosolids Management Association.

Oregon Administrative Rules, Chapter 340 Division 50, 1995.

Sampling to follow EPA protocol

Sample preparation and testing for fecal coliform and *Salmonella* sp. should follow protocols listed in EPA's ***Control of Pathogens and Vector Attraction in Sewage Sludge Manual*** (EPA/-92/013, December 1992), in **Appendices F** and **G**, on pages 103-106 and 107-115 respectively.

Composted biosolids must be monitored for either fecal coliform or *Salmonella* sp.. Where fecal coliform testing is used as a surrogate pathogen indicator, densities based on the geometric mean density must be less than 1,000 fecal coliform Most Probable Number (MPN) per gram of total solids (dry weight basis). If *Salmonella* sp. are used to determine pathogen regrowth, the arithmetic mean density of *Salmonella* sp. must be less than three (MPN) per four grams total solids (dry weight basis).

To assure fecal coliform densities adequately reflect actual microbial populations present at the time of sampling, composite samples must be collected over a period not to exceed one hour. Bacterial samples should be gathered during a period within two weeks immediately prior to the time when the compost would be marketed or distributed. Testing frequency would be quarterly thereafter, as long as product remains available for marketing and distribution.

The heterogeneous nature of some composted biosolids causes problems in sampling. For example, a composted product may be in a large pile comprised of wood chips and fine composted sludge. Most augers and sampling tools will be ineffective in getting a representative sample of the interior of such a pile. There may be no substitute for digging with a shovel to get to the desired location. When there is a large temperature gradient in the pile, it is important to include an analysis of the composted biosolids from the cooler section of the pile where the chance of regrowth of bacterial populations is greatest. It is also important that wood chips or other materials used as bulking agents are included in sampling the compost. In any case, samples from a large pile should be taken at various depths along its length.

Samples must be taken at least quarterly

To assess the impact of seasonal variation, testing of finished (cured) compost bacterial population shall be required at least once quarterly unless the compost will be processed, cured and distributed or marketed to the public in less than 90 days. Where composts would be made available to the public less than 90 days after the composting process was initiated, the Department will require more frequent testing. Testing frequency will be decided on a case-by-case basis.

3. Importing Biosolids to Oregon

Imported biosolids must meet quality standards in the state of origin

The land application of imported bulk biosolids is restricted to biosolids which meet:

1) § 503.13, Table 1 limits;

2) minimum EPA Class B pathogen quality in § 503.32(b);

3) minimum EPA vector attraction reduction requirements in § 503.33(b)(1)-(8), representing in-plant treatment options;

4) minimum biosolids quality requirements in the County, State, or Regional government where solids are produced; and

5) application rates which do not exceed agronomic rates for beneficial use.

Permit required for biosolids land application

Persons applying imported biosolids must be issued a Water Pollution Control Facility (WPCF) permit. Costs for permitting imported biosolids land application operations will be consistent with permit fees assessed for biosolids produced by Oregon sources. Until a new, separate permit fee category is established for this activity, permit fees will be based either on the design flow of the source (like they are for Oregon sources) or they will be the same as fees assessed minor industrial permits.

Landfill disposal of biosolids may be restricted in Oregon

Oregon Revised Statute (ORS) 459.055 (9) requires Oregon municipal solid waste landfills to manage solid waste from another state as it would be managed if disposed in that state.

> "Not withstanding any other provision of law relating to solid waste disposal, if the laws of any state prohibit or restrict the disposal of any kind of solid waste within the state of origin, such prohibition or restriction also shall apply to the disposal of such solid waste in Oregon."

Biosolids Annual Report Outline

I. Background/General

A. Facility
   1. Name, (District, Municipality, Other)
   2. Address
   3. Facility permit numbers
      a. NPDES or WPCF Permit #
   4. Facility contact and contact phone #

B. Reporting Period - previous calendar year

C. Narrative Descriptions of Processes
   1. Biosolids generation
   2. Biosolids preparation
   3. Biosolids application
   4. Annual goals, accomplishments, problems, (e.g., non-compliance with rules and regulations) changes

D. Total Annual Production (specify either dry tons or dry metric tons)
   1. Amount generated
   2. Amount prepared
   3. Amount applied

E. Total Application Acres Utilized

II. Pollutant Monitoring

A. Required Frequency

B. Parameter
   1. Sample measurement
   2. Annual average

Reporting Example:

Sample	#1	#2	#3	#4	Avg.	Exceedences
Hg (mg/kg)	5.0	6.4	7.2	5.6	6.0	0

III. Pathogen Reduction Monitoring and Recordkeeping

A. Description of Pathogen Reduction Process and § 503.32 Alternative

B. Operational Parameters Met During Sampling Interval (e.g., time/temperature)

C. Pathogen Monitoring Data
   1. Parameter measured
   2. Mean during required monitoring interval
   3. Annual mean
   4. Certification Statement

5. Biosolids Management Plans

Plans are required of biosolids producers and land appliers

A biosolids management plan provides a basic description of all processing and management aspects of biosolids production and land application. It needs to cover solids sources, treatment, handling, transport and land application. It also needs to include information on all land application sites and site selection criteria. All biosolids management plans should follow the format suggested in this policy to ensure all needed aspects are addressed and to ease DEQ staff review and approval.

Plans are the main administrative tool of the Oregon Biosolids Program.

Biosolids management plans serve to guide the specific program operations at facilities. Together with the facility permits and site authorizations, the plans provide assurance that biosolids activities are addressed in a comprehensive way, and problems with compliance are minimized. Plan approval conditions are enforceable extensions of the facility permit.

Separate Biosolids Policies cover certain elements of biosolids management plans and related policy and regulatory issues.

Plans must be kept current

Plans need to be kept current to address new circumstances in both the production of biosolids and the addition of new land application sites. Reviewing the plan during preparation of the annual report is a good idea to ensure it is accurate. Any change to the plan requires DEQ approval. As long as new application sites meet the site selection criteria in the approved biosolids management plan, no permit modification is needed.

On the following pages is a ***Biosolids Management Plan Outline.***

VII. Biosolids Utilization Program

A. Land Application
   1. Means of Transport
   2. Storage at Application Sites
   3. Application Methods
      a. Liquid Biosolids
         i. Truck application [splash plate/spray gun]
         ii. Sprinkler [spray gun]
      b. Dewatered Biosolids
         i. Truck application
         ii. Spreaders
      c. Dried Biosolids
         i. Spreaders

   4. Site Selection (Reference OAR 340-50-030)
      a. Landscape position
      b. Soils
      c. Sampling
         i. Soil Sampling
         ii. Well Sampling
      d. Notification of Property Owner
      e. Authorization

   5. Application Rates
   6. Testing/Sampling
   7. Recordkeeping/Monitoring

B. Composting
   1. Process Description
   2. Marketing/Distribution Plan
   3. Testing/Sampling
   4. Recordkeeping/Monitoring

C. Alkaline Stabilization
   1. Process Description
   2. Testing/Sampling
   3. Recordkeeping/Monitoring

D. Thermal Drying
   1. Process Description
   2. Marketing/Distribution Plan
   3. Testing/Sampling
   4. Recordkeeping/Monitoring

Once baseline levels of soil pollutants have been established, continuous tracking of biosolids pollutant additions is required. Pollutant additions would be computed by multiplying the number of dry tons of biosolids land applied after baseline soil concentrations have been determined, by the concentration of each pollutant, following the protocol indicated on page 9333, Volume 58, No. 32 of the Federal Register.

This approach measures the actual quantity of each pollutant present at a particular site. It takes into account not only the pollutants introduced via the land application of biosolids, but considers any naturally occurring pollutant levels as well as any pollutants already introduced to the site as a result of any of human activities. This is the most protective approach to determining pollutant loading since it accounts for actual inorganic element levels, including pollutants introduced via the land application of biosolids.

The Department may assist small agencies with limited staff in tracking biosolids dry matter and pollutant accumulations. Sources must report sufficient information to establish biosolids quantity and quality where solids have been applied to a particular site. This data will enable metal accumulations to be calculated.

To decrease expense associated with soils monitoring, a certain percentage (e.g., ≥20%) of an agency's actively used land application sites might be tested each year and baseline metal values at all sites might be evaluated in installments over a five year period. This would enable an agency to budget for soils monitoring, lessening the immediate economic burden. Under this approach, those sites which have received solids over the greatest period of time, sites with the highest annual loading rate, and sites receiving the largest quantity of solids should be assessed first. Prioritization of testing in subsequent years should be approached on a similar basis.

Further Considerations:

Agencies with biosolids where one or more pollutants exceed 67% of the National Sewage Sludge Survey value should determine the probable cause of elevated pollutant levels. This could involve a review of pretreatment program activities.

Under this evaluation method, a § 503.13 (b)(3) trace pollutant concentration confidence level assessment would be conducted at the beginning of each year. An agency's data sets for each of the 9 tested trace pollutants would be subjected to a statistical analysis to determine if any of the pollutants exhibited a reasonable potential to exceed the pollutant concentrations listed in § 503.13 (b)(1) & (3).The previous year's sampling data for an agency's land applied biosolids would be used to classify the current year's biosolids as either "clean" [§ 503.13 (b)(1)] or "very clean" [§ 503.13 (b)(3)]. Information resulting from the statistical analyses of data from the previous year would be used as a basis for an agency's planning (budgets, operations, maintenance, sampling, and analyses) for each upcoming new year.

The recommended confidence level interval for biosolids trace pollutant forecasting is 95%. Based on the analysis, if the confidence level is less than 95% that an agency can meet § 503.13(b)(1) or § 503.13(b)(3) (i.e., indicating that a reasonable potential exists for exceeding Table 1 or Table 3 concentrations), then the agency's biosolids will be reclassified to the appropriate biosolids category ("very clean", "clean" or "not acceptable" for land application under § 503, Subpart B) and managed in accordance with that quality rating the following year. The agency's biosolids will remain reclassified until it can be demonstrated by the agency that a confidence level for a higher or lower classification is warranted.

The recommended statistical approach is the method presented in EPA Manual, Test Methods for Evaluating Solid Waste, utilizing the **Student "*t*" statistic.**

Example of biosolids statistical analysis

An example calculation follows of biosolids copper concentration data from the Unified Sewerage Agency's Rock Creek Wastewater Treatment Facility.

The following Confidence Level evaluation was computed using the approved EPA method. The Student "t" is a continuous random variable whose probability distribution is completely specified by a single parameter, referred to as the number of degrees of freedom (df). For the Student t distribution, this parameter is determined by the sample size, n, and always df = n -1. The smallest value for df is 1 and therefore the Student "t" statistical method can be used for a sample size of 2 values. The determination of Confidence Level, using the Student "t" statistic, is calculated using the following equation:

OBJECTIVE: Define the 95 % confidence limit for 42 biosolids copper data points, using the **Student "*t*" statistic** approach.

Data is from the Unified Sewerage Agency's Rock Creek advanced wastewater treatment facility biosolids samples gathered between Jan. 3, 1990 and July 14, 1993.

Statistical Evaluation of Analytical Test Data (Biosolids Cake, Rock Creek WTP)		
Sample No.	Sample Value	$(x - \bar{x})^2$
1	875	19,600
2	745	100
3	816.2	6,593
4	858.6	15,277
5	830	9,025
6	679	3,136
7	1,350	378,225
8	916	32,761
9	702	1,089
10	763	784
11	654	6,561
12	747	12,544
13	832.9	9,584
14	975.8	57,985
15	906.9	29,550
16	831.2	9,254
17	687.3	2,275
18	553	33,124
19	598.4	18,660
20	729.4	31
21	788.4	2,852

8. Public Notification

All permits are subject to public notification

All wastewater treatment facilities seeking new or renewed permits are subject to public notice requirements. The permit application should include a biosolids management plan, which includes all approved land application sites and site selection criteria for any new sites.

Public notice process by publishing in a newspaper and mailing to list of interested people

Each DEQ main regional office has a permit coordinator who handles the process of public notice, including maintaining a list of interested people that receive notices. Any person can ask to be placed on any relevant mailing list. The permit coordinator arranges for publishing a statement describing the proposed activity in a newspaper of general circulation in the same area proposed for biosolids land spreading activities, including the following minimum information:

- name, address, and telephone number of a contact person from whom additional information can be obtained. For a proposed permit action this would include the regional DEQ office permit coordinator or permit writer responsible for the permit action for which public notice is being given.

- name and address of the permit applicant and, if different, the facility or activity regulated by the permit.

- a brief description of the activity described in the permit application.

- a brief description of the comment procedures and the time and place of any meeting or hearing that will be held (if any). If no meeting or hearing is scheduled, the statement includes the procedures for requesting a meeting or hearing, and any other procedures by which the public can participate in the final permit decision.

Biosolids management plans may require separate public notification

All permit applicants need to develop a biosolids management plan. If the plan is submitted with the permit application, it is available for public review with the permit. If the plan is developed later under a compliance schedule, it will be subject to a separate public notice at that time.

9. Winter Biosolids Storage Policy

Adequate storage is needed for winter rainy periods and for plant upsets

DEQ discourages the application of biosolids on wet or frozen ground when conditions would increase the potential for contaminants to runoff the site or enter groundwater. Adequate biosolids storage capacity is needed to avoid having to apply biosolids during unfavorable conditions. In the Willamette Valley, a minimum of three (3) to six (6) months storage capacity is recommended.

Besides biosolids storage, sewage treatment agencies need to have adequate capacity to store solids or liquids in the event of a unit process upset at the treatment works. Storage can also enable operators to optimize wastewater or solids treatment, while protecting water quality.

DEQ determines what is adequate storage on a case-by-case basis

Actual storage volume needs are based on a case-by-case evaluation of each facility. Factors used to evaluate the adequacy of storage capacity include:

- average climatic conditions
- biosolids total solids content (moisture content)
- availability of sufficient land application sites that are level to gently sloping, deep, and well drained to allow land application during the fall, winter, and spring periods when low precipitation and non-saturated soils allow some level of land application.

Agency solids storage needs are considered during the evaluation of facility plans for proposed treatment works upgrades. In a few cases, storage has been ordered as a condition of biosolids management plan approval. Agencies that treat domestic wastewater are required to either build or lease sufficient storage capacity based on the expected quantity of solids that will be generated during a 20 year design life.

Guidelines assist in establishing adequate storage

Guidelines are provided to define when it is appropriate to land apply biosolids and help define how much storage is necessary at a particular treatment works. Solids storage needs are, in part, influenced by the number and quality of sites available to agencies for land application.

4. Amount of Storage.

Storage needs will be evaluated according to the following priority:

a. POTWs that produce biosolids and are upgrading their treatment facilities and are proposing to or are currently land spreading solids will be required to provide adequate storage capacity for the 20 year design life as required under facilities planning. Long term biosolids storage facilities for liquid or cake sludge shall be designed to provide sufficient flexibility to store biosolids for a minimum of three to six months annually. The actual volume of storage needed will vary depending upon average climatic conditions, biosolids total solids concentration, and the availability of well drained land application sites. Storage capacity shall be designed to recognize the total solids density of the sludge product to be stored. Lesser storage capacity may be approved if the source can demonstrate to the Department's satisfaction, that it has sufficient inventory of well drained sites which can be managed to allow the application of solids during normal wet weather months. This assessment will be based on the evaluation of the local soil and climatic conditions, the availability of suitable winter biosolids land application sites, or other pertinent considerations. Storage capacity may not include storage in clarifiers, oxidation ditches or aeration basins, unless these are extra or unused for the digestive requirements.

b. For POTWs not upgrading their facilities, and who have 5 or more years of remaining design life, but need additional biosolids storage, an engineering report shall be submitted regarding the upgrading of the biosolids storage capacity. POTWs that are not upgrading their facilities, but are having biosolids management problems due to lack of storage, will be required to either build or lease sufficient storage capacity to accommodate minimum storage needs for the remainder of their design life. The volume of storage needed will vary depending upon average climatic conditions, biosolids total solids concentration, and the availability of well drained land application sites. The storage requirements will be based on the projected remaining design life left in the POTW and would be as follows:

Remaining Design Life of POTW	Design Year Storage Requirements
0 - 5 years	Take action to address immediate needs and start facility planning
6 - 10 years	10 years
10 - 15 years	15 years
15 - 20 years	20 years

c. Western Oregon facilities that are not in the process of upgrading and are not encountering solids storage problems are not required to expand their biosolids storage capacity.

Storage Plan elements include:

- **Empty Lagoons**

Begin each rainy season with empty storage lagoons (four lagoons with a combined capacity of 6,338,755 gallons).

- **Utilize Thickening**

Institute low feed rate biosolids thickening at the onset of rainy season to a dedicated lagoon. This maintains storage capacity in the digesters. It is used in conjunction with hauling operations to get ahead of production volumes. Centrate is recycled and lagoon volume is reduced.

Another option for storage is running all biosolids through dewatering systems prior to lagoon storage. This increases solids from 2% to 10%, increasing lagoon storage capacity from approximately 70 days to 350 days.

- **Limit Biosolids Hauling and Land Application During Inclement Weather**

When inclement weather is prolonged, limiting hauling operations, and when production is greater than thickening plus hauling operations, biosolids are transferred directly to an empty lagoon. Decanting begins upon biosolids separation and decant is recycled back to the main wastewater treatment process at a non-interfering rate. Approximately 30 % of the volume is decanted.

- **Apply Biosolids When Conditions Allow**

Storage period generally runs from November through June. Storage capacity is 6,338,755 gallons. During the 1992-1993 fall, winter and spring period, storage was required periodically during a 242 day interval. No application of biosolids occurred for 105 days during this interval (see Table). Storage capacity available at the end of the rainy season in 1993 was 2,845,503 gallons.

Through a combined use of storage lagoons, thickening and land application on well-drained sites, Salem has been able to successfully manage its biosolids in an area of the Willamette Valley which receives an annual average of 41.3 inches of precipitation. Solids generated by the Willow Lake treatment facility have been effectively handled using two to three months storage in combination with thickening, decanting, hauling, and land application when conditions allow. Six months storage capacity has not been necessary.

Critical climatic factors consider evapotranspiration (reflected by the season of the year) and occurrence of rainfall prior to the desired biosolids application date. These determinants are used to calculate the index since they are readily available from maps and soil surveys (slope and available water holding capacity) and on-site measurements (daily rainfall).

The past rainfall index (PRI) is calculated as follows:

For slopes ≤**25%**:

$$PRI = (1/S) + (1/WHC) + 0.3P4 + 0.5P3 + 0.8P2 + P1 + 1.2PO$$

For slopes ≥**25%**:

$$PRI = S + (1/WHC) + 0.3P4 + 0.5P3 + 0.8P2 + P1 + 1.2PO$$

Where:

S = Percent slope;

WHC = Water holding capacity of the A horizon in inches of water per inch soil (obtainable from SCS Soil Survey data for principal soil series at a particular slope phase);

Pn = Precipitation, in inches, for day 2, 3, etc., prior to application, and

PO = the predicted amount for the current day (If PO is not available, it is dropped from the equation).

The PRI is calculated each morning. If the index exceeds the specified critical value, a walk over inspection is made of the site, and in conjunction with the long-term weather forecasts (5-day), a determination is made to see if biosolids application may proceed as planned or whether solids should be stored or applied at an alternative location.

The source site manager is to make daily observations and keep a log of the conditions with the calculated PRI index so an experience base can be built to a set of critical PRI index values for future use.

Other Climatic Conditions

Other climatic conditions that must be considered in determining the suitability of a site include snow, frozen soil, wind speed and visibility.

Snow

In western Oregon, biosolids may be land applied following a light dusting of snow , but if there is greater than one-half inch of snow and the application of solids will not cause the snow to melt within a couple days from heat conducted from the solids and the underlying soil, biosolids should not be applied. If subfreezing temperatures are forecast for a few days following biosolids application and rainfall is not likely, the allowable period for melting can be extended by a few days.

Wind

If wind speed is such that biosolids would be blown into buffer strips, waterways, roads, trails or ditches or onto the application vehicle itself, application should stop immediately until the wind has stopped or slowed so that no significant drifting occurs.

Fog

If fog causes such poor visibility that the applicator vehicle operator is not able to clearly see buffer boundaries or areas where biosolids have been previously applied, application must cease immediately. The presence of fog also creates unsafe operating conditions. When fog limits clear visibility to less than 1.5 times the distance of the spread stream, application should be discontinued until visibility improves.

Lighting

Uniform biosolids application relies on the operator's ability to see that the surface of the application site receives a complete coat of biosolids and that over-application and/or spotty application does not occur. Loss of visibility from poor lighting during dawn and dusk will restrict operations and application must cease.

Samples must be representative

The primary purpose of Vector Attraction Reduction (VAR) criteria is to ensure that solids are stable enough to be land applied without resulting in odor or nuisance complaints. Samples of VS stabilized should be representative of the biosolids to be land applied. The sample point for VS raw is normally the point where solids exit a primary clarifier, gravity thickener, gravity belt thickener, Dissolved Air Flotation Thickener or other thickening process. Performance of individual digesters is not a primary concern and is monitored separately. If compliance can be met at the outlet of a digester, this is acceptable, but not specifically required for compliance purposes. Both inflow and discharge from individual digesters should be pooled on a representative basis, to show VAR compliance for the product going out to beneficial use. Digesters failing to meet normal operational criteria should not be included in the pooled sample and should not be blended with other digester solids for land application. Also, caution is advised for interpreting results from any samples mixed with polymer.

Arithmetic means can then be used to evaluate § 503 compliance. These can be computed on a "running average" basis, so that the facility operator always knows his status regarding VAR levels. To go a step further, a 95 percent confidence interval can be computed as outlined in the biosolids pollutant trace forecasting policy on page 15.

Van Kleeck equation

Ten vector attraction reduction options are available to wastewater treatment facilities who produce biosolids for bulk land application under § 503.33(b). Option 1 [§ 503.33(b)(1)] requires a demonstration that volatile solid concentrations are reduced by 38 percent prior to land application. There are a variety of equations that may be used in performing this calculation, but the most widely used equation is the Van Kleeck equation, which is usually shown as follows:

$$FVSR = \frac{VS_{(raw)} - VS_{(stabilized)}}{VS_{(raw)} - [VS_{(raw)} \times VS_{(stabilized)}]}$$

where:

FVSR = Fractional reduction of volatile solids (multiply by 100 for percent)

$VS_{(raw)}$ = Volatile fraction in raw sewage sludge

$VS_{(stabilized)}$ = Volatile fraction in stabilized sewage sludge

APPENDIX D

OSU EXTENSION PUBLICATION "FERTILIZING WITH BIOSOLIDS"

PNW 508 • June 1998
$2.00

Fertilizing with Biosolids

D. Sullivan

Biosolids are a by-product of municipal wastewater treatment. They contain organic matter and nutrients that are beneficial for soil, crop, and livestock productivity. Raw sewage solids must be processed to meet U.S. Environmental Protection Agency (USEPA) standards before they can be called biosolids.

This publication focuses on how biosolids can be used to supply nutrients to crops. Other aspects of biosolids utilization also are addressed briefly, including:

- Biosolids quality factors (trace element concentrations and pathogen levels)
- Applicable regulations
- Questions about biosolids safety and application practices

Biosolids as a Nutrient Source

Nutrient content

Biosolids usually are applied at rates designed to supply crops with adequate nitrogen. They also contain other nutrients that reduce fertilizer requirements. Table 1 shows the typical macronutrient content of biosolids produced by Pacific Northwest wastewater treatment facilities. The total nutrient content shown in Table 1 includes rapidly and slowly available nutrient forms.

- Inorganic nitrogen (ammonium) and sulfur (sulfide) compounds in biosolids are rapidly available. Nitrogen and sulfur-containing organic compounds are slowly converted via microbial activity to plant-available forms.
- Field research in the Northwest has shown that about 40 percent of the total sulfur (S) supplied by anaerobically digested biosolids becomes available during the first year of application. See "Biosolids Nitrogen" for details on nitrogen (N) availability for biosolids.
- Approximately half of the total phosphorus in biosolids is in inorganic forms that are rapidly available for plant uptake. This inorganic P is present as Al, Ca, and Fe phosphates and as Fe, Al, and Mn hydrous oxides. These forms of P are similar to those formed shortly after fertilizer P (Ca phosphate) application to soils.
- Calcium and magnesium concentrations in biosolids vary widely, depending on the hardness of the local water supply and whether alkaline materials are used in processing (see "Soil pH").
- All biosolids are low in potassium, which is water-soluble and is removed with treatment plant effluent (reclaimed water). For crop production, the amount of K needed from other sources (e.g., fertilizer, manure) is *not* affected by a biosolids application.
- Biosolids also provide essential micronutrients including copper, boron, molybdenum, zinc, and iron.

Table 1.—Biosolids organic matter and macronutrients (dry wt. basis).[a]

Nutrient	Usual range[b]	
	Low	High
	%	%
Organic matter[c]	45	70
Nitrogen	3	8
Sulfur	0.6	1.3
Phosphorus	1.5	3.0
Calcium	1.0	4.0
Magnesium	0.4	0.8
Potassium	0.1	0.6

[a]Nutrient concentrations are expressed on a total elemental basis; not all elemental content is in a plant-available form. Concentrations for organic matter, nitrogen, phosphorus, and potassium are based on a 1995 Oregon Association of Clean Water Agencies survey. Sulfur, calcium, and magnesium concentrations are based on biosolids analyses from seven Pacific Northwest wastewater treatment facilities.

[b]The usual nutrient concentration range includes approximately 80 percent of the biosolids analyses reported. Biosolids composts and alkaline-stabilized biosolids were not included in the calculation of the usual nutrient concentration range.

[c]Organic matter as determined by loss on ignition (volatile solids).

Dan Sullivan, Extension soil scientist, Oregon State University.
Financial support for this publication was provided by Oregon Association of Clean Water Agencies and Northwest Biosolids Management Association.

Balance between biosolids nutrient inputs and crop nutrient removal

The nutrients supplied by biosolids are not present in the same ratio as they are found in plant tissue. Therefore, biosolids supplied at an agronomic rate for nitrogen supply an excess of some nutrients (e.g., phosphorus) and not enough of other nutrients (e.g., potassium).

Table 2 gives a general example of the relationship between biosolids nutrient inputs and crop removal of nutrients. The general nutrient balance illustrated in Table 2 (positive or negative for a particular nutrient) is valid for most crops. Nutrients accumulate in the soil to a greater extent if nutrients are recycled onsite via crop residues (e.g., grass managed for seed production) or if harvest is by grazing.

Table 2.—Example: Annual change in soil nutrient status with a 4-dry-ton-per-acre biosolids application. Tall fescue grown for grass hay or silage.

Total nutrient applied	Biosolids nutrient input[a] lb/acre	Grass nutrient removal[b] lb/acre	Net nutrient input to soil[c] lb/acre
Nitrogen	400	220	130
Phosphorus	160	32	128
Potassium	24	240	-216
Sulfur	80	40	40
Zinc	6.8	0.4	6.4
Copper	4.7	0.1	4.6

[a]Estimated total nutrient input with application of 4 dry tons biosolids per acre per year. Loss of 50 lb N/acre as ammonia is estimated at application.

[b]Based on field research in western Oregon and Washington (tall fescue harvested four to five times each year, yielding about 1 ton of dry forage per harvest).

[c]Calculated as total nutrient inputs minus grass harvest removal. Leaching losses of all nutrients are assumed to be insignificant.

Fertilizer replacement value of biosolids

The table below estimates the fertilizer replacement value of biosolids nitrogen, phosphorus, potassium, and sulfur for the first year after application. This estimate is based on typical biosolids analyses and estimates of nutrient availability from university field trials. The first-year nitrogen value of a 4-dry-ton/acre biosolids application supplying 120 lb available N is approximately $36 per acre.

The fertilizer replacement value for nutrients besides N depends on existing soil test values and the cropping system. Typically, a biosolids application to meet crop N requirements eliminates the need for annual P and S applications. Biosolids have the greatest fertilizer replacement value when they are applied to soils testing low in available P.

The fertilizer replacement value calculated below does not include the potential benefits to soil quality from biosolids (Table 9). Soil quality benefits are difficult to express in simple economic terms.

Fertilizer replacement value per dry ton of anaerobically digested biosolids. First year after application.

Nutrient	Expressed as[a]	Total nutrient % dry wt.	Available nutrient[b] % dry wt.	Nutrient cost[c] $ per lb	Value per dry ton
Nitrogen	N	4.0	1.5	0.30	$9.00
Phosphorus	P	2.0	1.0	0.55	$11.00
Potassium	K	0.3	0.3	0.35	$2.10
Sulfur	S	1.0	0.4	0.06	$0.48
Total					$22.58

[a] To convert P and K to units used in fertilizer marketing: multiply P by 2.29 to get P_2O_5; multiply K by 1.20 to get K_2O.

[b]Estimated plant-available nutrient released in the first year after biosolids application.

[c]Approximate nutrient cost is based on Willamette Valley bulk fertilizer prices, March 1996. The actual cost of a pound of fertilizer N, P, or K varies depending on nutrient form and analysis (e.g., costs differ for anhydrous ammonia and calcium nitrate as a source of N), transportation and application charges, market conditions, and the quantity purchased.

Soil testing at biosolids application sites

Soil testing can be used to monitor the change in soil fertility resulting from biosolids application. For elements such as P and Zn that are relatively immobile, take soil samples to a depth of 12 inches, since test interpretations usually are based on this depth (e.g., Marx et al., 1996). For mobile nutrients such as N and S, a sampling depth greater than 12 inches often is recommended.

When biosolids are applied to perennial grasses or other cropping systems without tillage, smaller sampling increments near the soil surface (e.g., 0-3 inches and 4-12 inches) give better information on changes in nutrient availability, soil pH, and salinity (conductivity).

To get the best information from soil testing, we recommend that growers work with a qualified agronomist to develop a sampling plan to fit their cropping system and biosolids application techniques.

Table 3 shows an example of how soil testing can help growers realize the greatest benefit from biosolids application. In the example, soil test phosphorus and zinc increased as the amount of biosolids applied increased. After a 3-dry-ton application, soil test P and Zn were well above the minimum soil test values needed for dryland wheat (10 mg/kg bicarbonate-extractable P, and 0.5 mg/kg DTPA-extractable Zn). Instead of repeat applications at the same site, more benefit would be obtained by correcting P and Zn deficiencies at other sites with low soil test values.

Table 3.—Example: biosolids effects on soil test phosphorus and zinc (dryland winter wheat).[a]

Biosolids applied dry ton/acre	Soil test (0–12 inch)[b] P mg/kg[d]	Zn mg/kg	Soil test interpretation[c] P	Zn
0	13	0.7	medium	possible deficiency
3	18	1.2	medium	sufficient
6	24	1.9	high	sufficient
9	32	2.6	high	sufficient

Adapted from: Sullivan et al., 1995.

[a]Example data represent the average of four locations in central Washington cropped to dryland winter wheat. Soil was sampled approximately 18 months after biosolids application. Average biosolids P concentration was 2.65 percent, and average biosolids Zn concentration was 870 mg/kg (dry weight basis).

[b]Soil test phosphorus via bicarbonate extraction, zinc via DTPA extraction. Soil test P and Zn are indexes of soil nutrient status; they cannot be used to calculate lb of available nutrient per acre.

[c]Soil test interpretation from OSU Extension publication, EC 1478, *Soil Test Interpretation Guide* (Marx et al., 1996).

[d]The units mg/kg are equivalent to parts per million (ppm) on a dry weight basis.

Applying more P to soils that already have high soil test P values is a potential environmental risk. Runoff and eroded sediment can move P to lakes or streams, where it can reduce water quality. At repeat application sites with a high potential for offsite P movement, soil testing can help prevent excessive accumulations of P.

Biosolids Nitrogen

Nitrogen forms

Wastewater treatment facilities routinely monitor biosolids ammonium, nitrate, and organic N concentrations. The organic N concentration is determined by subtracting the amount of ammonium-N from total N (TKN) concentration. Nitrate-N is present at insignificant concentrations in most biosolids, so it is ignored in the remainder of this discussion.

The proportions of ammonium and organic N in biosolids vary with the stabilization process (e.g., digestion, composting) used at the wastewater treatment facility (Table 4). Anaerobically digested liquid biosolids often contain more ammonium than organic N. Other biosolids contain most of the N in organic form.

Ammonium-N is available to plants immediately after application. Organic N provides slow-release N for crops after application.

Table 4.—Effect of biosolids processing on N forms in biosolids.[a]

Processing	Moisture content	Ammonium N	Organic N
		Percent of total N content[b]	
Anaerobic digestion	liquid	60	40
Aerobic digestion	liquid	25	75
Aerobic/anaerobic digestion and storage in lagoon > 6 months	liquid	25	75
Anaerobic digestion and dewatering	semi-solid	25	75
Drying bed	solid	25	75
Heat-drying	solid	10	90
Composting	solid	10	90

[a]Sources: 1989–94 Oregon wastewater facility data compiled by Oregon DEQ, and 1995 Oregon facility data compiled by the Oregon Association of Clean Water Agencies.

[b]Example using table data: For biosolids containing 4 percent total N (dry weight basis), anaerobically digested liquid biosolids would contain approximately 2.4 percent ammonium N and 1.6 percent organic N, while drying bed biosolids would contain approximately 3 percent organic N and 1 percent ammonium N.

Plant-available Nitrogen

Two processes affect the amount of plant-available N (PAN) provided by a biosolids application: ammonium-N retention and organic N mineralization. These processes are described briefly below.

Ammonium N retained after application

When biosolids are surface applied (not incorporated into soil at application), a portion of the biosolids ammonium-N is lost as ammonia gas. Ammonia loss is very rapid during the first hours after application. Estimates of ammonium retention after surface application range from 0 to 70 percent of the ammonium-N applied. An estimate of 50 percent ammonium-N retention commonly is used for planning purposes. Immediate tillage after biosolids application increases ammonium retained, but is not practical or desirable for many cropping situations.

Organic N mineralization

Organic N in biosolids is converted to plant-available forms (ammonium and nitrate) by soil microorganisms after field application (a process known as mineralization). The biosolids treatment process affects the organic N mineralization rate after land application (Table 5). Freshly digested biosolids usually contain more mineralizable N than do biosolids produced with more intensive stabilization processes (composting, long-term lagoon storage).

Table 5.—Effect of biosolids processing technologies on first-year organic N mineralization rate.

Processing	First-year organic N mineralization rate
Anaerobic digestion	20–40
Aerobic digestion	30–45
Aerobic/anaerobic digestion and storage in lagoon > 6 months	15–30
Anaerobic digestion and dewatering	20–40
Drying bed	15–30
Heat-drying	20–40
Composting	0–20

The organic N mineralization rate also is affected by soil temperature and moisture conditions. Mineralization is most rapid in warm, moist soils.

Mineralization proceeds most rapidly immediately after biosolids application, provided soil temperature and moisture are favorable. Usually, more than half of first-year N mineralization occurs within the first 3 to 6 weeks after biosolids application.

The quantity estimated for the first year (Table 5) represents cumulative mineralization in 2 to 5 months in spring, summer, or fall. In winter, when soil temperatures are less than 40°F, mineralization is very slow.

Soil and plant tissue testing can be used to determine actual N availability after a biosolids application.

Repeated Application to the Same Site

The organic N not mineralized during the first year after application is mineralized slowly in succeeding years. Thus, when biosolids are applied repeatedly to the same site, the annual application rate needed to meet crop needs is reduced.

University field research with perennial grasses demonstrates this slow-release N contribution of biosolids (Table 6). To compare fertilizer N to biosolids total N, we use the term "relative effectiveness." At 50 percent relative effectiveness, an annual application of 2 lb total N as biosolids is equivalent to application of 1 lb of fertilizer N.

In the first year of application, biosolids total N was 27–40 percent as effective as fertilizer N. In the second and third years of continuous application, biosolids total N was 41–59 percent as effective as fertilizer N.

Thus, for the tall fescue example (Table 6), biosolids application rates needed to equal an annual fertilizer N application rate of 200 lb N/acre were 540–740 lb biosolids total N/acre in year 1, and 340-490 lb biosolids total N/acre in years 2 and 3.

Table 6.—Relative effectiveness of biosolids total N for tall fescue production compared to fertilizer N[a]

Biosolids Type	Location	Years of continuous biosolids application: 1	2	3
		Relative effectiveness, percent of fertilizer N[b]		
Dewatered	Puyallup, WA	37	59	49
Heat-dried	Puyallup, WA	40	49	41
Liquid	Aurora, OR	27	41	44
Average		35	50	45

[a] Biosolids were applied at the same total N application rate in years 1, 2, and 3 of each study. Data sources: Puyallup, WA, 1993-95 (Cogger et al., unpublished data); Aurora, OR, 1976-78 (Kiemnec et al., 1987).

[b] Relative effectiveness in increasing harvested grass N uptake. Relative effectiveness of 50 percent means that a current-season application of 2 lb biosolids total N was equivalent to 1 lb fertilizer N (ammonium nitrate, 34-0-0).

Converting nitrogen availability estimates to application rates

The estimated plant-available N (PAN) provided by a biosolids application usually is reported on a dry weight basis (e.g., 1.5 percent PAN or 30 lb PAN per dry ton). For field application, solids never are dry. Factors that can be used to convert an estimate of biosolids PAN to a field N application rate are shown at the right.

To use these conversion factors, you must know the percent total solids content of the biosolids. For example, biosolids containing 98 percent liquid contain 2 percent total solids.

Converting from dry weight PAN estimate to application units.

To convert from % PAN, dry weight basis to:	Multiply % PAN, dry weight basis by:
lb PAN/1,000 gal	percent total solids x 0.834
lb PAN/acre-inch	percent total solids x 22.65
lb PAN/wet ton	percent total solids x 0.2

Note: This table converts from biosolids PAN as a percentage of dry weight. If, on the other hand, the municipality lists PAN in terms of lb/dry ton, divide by 20 to get % PAN on a dry weight basis. For example, biosolids with estimated PAN of 30 lb N/dry ton contain 1.5 percent PAN on a dry weight basis.

Examples: Conversion from %PAN, dry weight basis to application rates

A city produces biosolids with an estimated PAN of 1.7 percent (dry weight basis). The biosolids are applied as a slurry containing 4 percent total solids. You estimate that 100 lb PAN/acre should be applied to meet the crop yield goal. You can calculate the amount of liquid biosolids to apply as follows:

Example A: Conversion to gallons per acre

Step 1. Convert % PAN on a dry weight basis to application units using the table above:

Biosolids PAN (lb/1,000 gal) = % PAN, dry weight basis x % total solids x 0.834
= 1.7 x 4 x 0.834
= 5.67 lb PAN/1,000 gal

Step 2. Calculate the biosolids application rate:

Biosolids application rate (thousand gal/a) = lb N/acre ÷ lb PAN/1,000 gal
= 100 ÷ 5.67
= 17.6 (17,600 gal/acre)

Example B: Conversion to acre-inches

Step 1. Convert % PAN on a dry weight basis to application units using the table above:

Biosolids PAN (lb/acre-inch) = % PAN, dry weight basis x $ total solids x 22.65
= 1.7 x 4 x 22.65
= 154 lb PAN/acre-inch

Step 2. Calculate the biosolids application rate:

Biosolids application rate (acre-inches) = lb N/acre ÷ lb PAN/acre-inch
= 100 ÷ 154
= 0.65 acre-inches

Soil pH

Maintaining an appropriate soil pH is essential in maintaining the productivity of cropping systems. Biosolids application can increase or decrease soil pH (Table 7), depending primarily on whether alkaline materials are used in biosolids processing.

Table 7.—Biosolids effects on soil pH.

Type of biosolids	Biosolids input	Effect on soil pH	Soil process
Alkaline-stabilized	Ca oxides and hydroxides	increase	Converts soil acidity to water and carbon dioxide.
All	soluble salts	temporary decrease	Cations displace acidity from soil clays and organic matter, bringing it into soil solution.
All	organic N and S	decrease	Oxidation in soil to nitrate and sulfate produces acidity.
All	exchangeable Ca and Mg	increase	Supplies non-acidifying cations.

Alkaline-stabilized biosolids

Some biosolids are stabilized with alkaline materials (calcium oxide or calcium hydroxide) to reduce odors and meet USEPA pathogen reduction requirements. In a typical alkaline stabilization process, the biosolids/alkaline material mixture reaches a pH of 12 or greater for at least 2 hours before application. At this high pH, ammonia loss is rapid. Ammonia loss produces acidity, which neutralizes some of the alkaline material before application.

After application, the residual alkaline material rapidly neutralizes soil acidity, thereby increasing soil pH (first process in Table 7). Thus, alkaline-stabilized biosolids act as a replacement for agricultural limestone. Post-application increases in soil pH, exchangeable soil calcium, and soil SMP buffer pH can be used to determine the liming value of a biosolids/alkaline materials application.

Biosolids stabilized without alkaline materials

When biosolids that do not contain added alkaline materials are applied, the change in soil pH is the net result of the last three factors listed in Table 7. Shortly after application, a drop in soil pH (acidification) may be observed, usually 0.2 to 0.5 pH units. Acidity is generated by the addition of soluble salts and by the oxidation of organic N and S compounds.

This pH drop usually is short lived and is balanced by the calcium and magnesium added by biosolids. Because several factors are involved, soil testing is recommended to monitor soil pH at biosolids application sites.

The effect of biosolids vs. fertilizer N application on soil pH is shown in Table 8 for one Willamette Valley application site. The soil pH values listed were measured after 7 years of biosolids or fertilizer N (ammonium sulfate) application. The liquid anaerobically digested biosolids applied in the study did not contain added alkaline materials. The soil pH after 7 years was the same for biosolids application and for an annual application of 100 lb N per acre as ammonium sulfate.

Table 8.—Surface soil pH (0–12 in) after 7 years of biosolids or ammonium sulfate application to a Willamette Valley silt loam soil.[a]

N Source	Total N applied lb/acre/yr	Soil pH
None	0	5.4
Biosolids[b]	140–210	5.2
	290–420	5.1
Ammonium sulfate	100	5.1
	200	4.9
	300	4.7

Source: Kiemnec et al., 1990.

[a] Location: Aurora, OR. Soil pH (0–8 inches) at the start of the study was 5.7. The soil had a cation exchange capacity of 15 meq/100g soil.

[b] Average for anaerobically digested liquid biosolids from three Oregon wastewater treatment facilities: Portland, Salem, and Rock Creek (Unified Sewerage Agency, Washington County). All biosolids sources in the study performed similarly.

Soil Quality

Biosolids application also affects soil chemical, physical, and biological properties. Together, these properties determine soil quality. Biosolids supply both nutrients and organic matter for soil quality improvement.

The organic matter provided by biosolids does not by itself increase soil organic matter a great deal. However, when combined with other soil management practices that favor accumulation of organic matter (e.g., reduced tillage, use of cover crops), biosolids application helps improve soil quality. The changes in soil quality accompanying biosolids application generally improve the capacity of crops to utilize nutrients. Potential benefits of biosolids application on soil quality are listed in Table 9.

Table 9.—Ways that soil quality can improve with biosolids application.

Physical	Greater water-holding capacity
	Improved tilth
	Reduced soil erosion
Chemical and biological	Increased cation exchange capacity
	Plant-available nitrogen and sulfur slowly released from organic forms
	Micronutrient deficiencies corrected
	Increased earthworm and microbial activity

To utilize the slow-release N provided by biosolids, cover crops may be needed to capture the organic N mineralized from biosolids in late summer and early fall. Otherwise, this slow-release N is likely to be lost via nitrate leaching.

What about heavy metals?

Heavy metals were a concern when land application of biosolids began 25 years ago. However, since then, source control activities have been very effective in decreasing metal inputs to wastewater treatment facilities:

- Wastewater treatment facilities now issue permits to major industrial wastewater sources and routinely monitor metal concentrations in the industrial wastewater. To comply with permit requirements, industries have adopted manufacturing processes that keep metals out of the sewer system.
- Adjustment of city water supplies to a higher pH has reduced pipe corrosion and the concentrations of zinc, copper, and lead in household wastewater.
- The use of PVC pipe instead of metal pipe also has reduced metal concentrations.

The table below shows the impact of source control activities on biosolids metal concentrations. Metals in Portland biosolids have been reduced by a factor of 2 to 10 times over the past 15 years. Today, biosolids metal concentrations are similar for cities with industrial inputs (Portland biosolids concentrations, below) and smaller treatment facilities with few industrial inputs (Average Oregon biosolids concentrations, page 9).

Decrease in metal content of City of Portland biosolids between 1981 and 1996.

	City of Portland biosolids[a]	
	1981	1996
Metal	mg/kg	mg/kg
Cadmium	40	5
Copper	1,000	481
Lead	900	181
Nickel	190	39
Zinc	2,200	834

Crop Yield and Quality

Biosolids fertilization often increases crop yield potential over that attainable with other nutrient sources that do not supply organic matter or micronutrients. The most dramatic improvements in site productivity are observed when biosolids are applied to severely eroded cropland.

As with any nitrogen source, over-application of biosolids can reduce crop yield and quality. Research with dryland wheat grown in the 10- to 14-inch annual precipitation zone (east of the Cascades) has demonstrated that biosolids applications that supply too much N can reduce grain yield and quality. Supplying too much N is less of a crop quality problem for pasture and grass forage production, because the N is utilized for increased protein content. Biosolids rates for woody vines and tree crops should be monitored carefully, as N supplied in excess late in the growing season can result in increased winter injury.

Forage Quality

Macronutrients

When similar amounts of available N are supplied with biosolids or fertilizer N, the biosolids-fertilized forage usually has higher phosphorus and sulfur content (Table 10). Unlike most dairy and poultry manures, biosolids are low in potassium and do not increase forage potassium, except when the typical forage is nitrogen-deficient.

Table 10.—Tall fescue macronutrient concentrations after 4 years of biosolids or fertilizer N application.[a]

	Nutrient concentration	
Nutrient	Grass grown with biosolids mg/kg	Grass grown with fertilizer N mg/kg
Calcium	0.62	0.48
Magnesium	0.26	0.24
Potassium	3.2	3.4
Nitrogen	2.3	2.1
Phosphorus	0.39	0.30
Sulfur	0.49	0.19

[a] Tall fescue grown for grass silage, Puyallup, WA on a Puyallup sandy loam soil. Biosolids were applied at approximately 500 lb total N/acre/yr; fertilizer N (34-0-0) was applied at 300 lb N/acre/yr.

Site soil test data (0–12 in): Soil pH: 5.5. Exchangeable Ca: 4 meq/100g; Mg: 1 meq/100g; K: 0.25 meq/100g. Phosphorus (Bray P1): 200+ mg/kg. For grass grown with fertilizer N, applications of K, Mg, and S fertilizers were applied to prevent nutrient deficiencies.

Micronutrients

Biosolids provide plant-available copper, zinc, and manganese. Biosolids application can help correct deficiencies of these elements in animal diets. Research with forage grasses (Table 11) has shown that typical micronutrient concentrations in biosolids-fertilized grasses are far below levels considered detrimental to animal performance.

Table 11.—Tall fescue micronutrient concentrations after 4 years of biosolids or fertilizer N application.[a]

Nutrient	Grass grown with biosolids mg/kg	Grass grown with fertilizer N mg/kg	Required concentration in total diet[b] mg/kg	Recommended maximum concentration in total diet[b] mg/kg
Copper	9	7	4–11	25-115
Manganese	155	168	20–50	1,000
Zinc	51	26	20–40	500–750

[a] Tall fescue was grown at the same site and with the same management described in Table 10.

[b] Required concentration in total diet and recommended maximum concentration in total diet for beef cattle, sheep, and horses. Source: Cuhna, 1987.

Site Approvals for Biosolids Application

Is site approval needed?

Whether you need a permit or site approval for biosolids application to cropland depends on:

- Trace element concentrations in the biosolids relative to USEPA standards
- Whether the biosolids meet USEPA Class A or Class B pathogen reduction requirements

Site approvals always are required for Class B biosolids application. More information on trace element and pathogen reduction requirements is given on page 9, "Biosolids Quality."

Who obtains site approval?

When needed, site approvals for biosolids application generally are obtained by wastewater treatment plant representatives. Some private companies, working under contract with the wastewater treatment facility, also may assist in obtaining site approval.

Biosolids quality

Biosolids quality is based on:

- Trace element concentrations in biosolids
- The completeness of the pathogen reduction process used by the wastewater treatment facility

These biosolids quality factors are described briefly here. Additional details can be found in USEPA, 1993, and Sullivan et al., 1993.

Together, these two quality factors determine whether site approvals by a regulatory agency are required for biosolids application.

Trace elements

Current trace element concentrations usually are well below concentration standards set by USEPA for biosolids (see table at right). The current concentrations of trace metals in biosolids allow most wastewater treatment facilities to produce a beneficial product suitable for land application.

The USEPA standards, adopted in 1993, are based on more than 20 years of field research and a comprehensive risk assessment. The lower concentration standard for trace elements (Exceptional Quality Limit in the table) is for biosolids products distributed to the public. The higher concentration standard (Ceiling Limit in the table) applies to all land-applied biosolids. If one element in the product exceeds the Ceiling Limit, then the product cannot be called biosolids and cannot be land applied.

Pathogen reduction

Pathogens are organisms, such as bacteria, that can cause disease in humans. Before application to cropland, biosolids must be processed to meet either USEPA Class A or Class B pathogen reduction standards.

Class A biosolids are essentially pathogen-free and usually are sold or distributed in urban areas for landscaping or turf fertilization. Because of the greater flexibility in management afforded by Class A treatment, more facilities are moving toward Class A biosolids production.

Class B biosolids have been processed to significantly reduce, but not eliminate, pathogens. Biosolids of Class B quality usually are delivered to farmers for land application. The most common processing methods for Class B biosolids are aerobic or anaerobic digestion. Some treatment facilities add alkaline materials such as calcium hydroxide to kill pathogens and meet Class B standards.

After land application, pathogens in Class B biosolids are killed by exposure to sunlight, drying conditions, unfavorable pH, and other environmental factors. Site management practices required at Class B biosolids application sites protect public health.

Trace elements in Oregon biosolids in comparison with USEPA concentration limits for land application.

Trace element	Oregon biosolids average[a] mg/kg	USEPA Exceptional Quality limit[b] mg/kg	USEPA Ceiling Limit[b] mg/kg
Arsenic	6	41	75
Cadmium	5	39	85
Copper	589	1,500	4,300
Lead	94	300	840
Mercury	2	17	57
Molybdenum	8	75[c]	75
Nickel	32	420	420
Selenium	9	100	100
Zinc	852	2,800	7,500

[a]Average concentration for 37 Oregon biosolids products as reported by the Oregon Association of Clean Water Agencies (1995 data).

[b]Source: USEPA guidelines for pollutant concentrations in biosolids (40 CFR Part 503). The Exceptional Quality Limit applies to biosolids suitable for distribution without site approvals; the Ceiling Limit is the maximum for land application of biosolids. To be called "Exceptional Quality Biosolids" by USEPA, biosolids also must be Class A for pathogen reduction.

[c]The USEPA Exceptional Quality Limit for molybdenum currently is under review.

What agency is responsible for site approvals?

Oregon:	Department of Environmental Quality
Washington:	County health departments and Washington State Department of Ecology
Idaho:	USEPA

Site management practices

Table 12 shows the site management practices required for biosolids meeting USEPA's Class A or Class B pathogen reduction requirements. The additional site management practices for Class B biosolids application sites protect public health.

Class A and B refer only to the completeness of pathogen reduction processes. Biosolids also must meet standards for trace element concentration (see "Biosolids Quality," page 9).

For most crops, the waiting period is 30 days after Class B biosolids application before grazing or crop harvest. For crops whose edible portion may directly contact the biosolids (e.g., root crops such as potatoes or carrots, and low-growing vegetable and fruit crops such as lettuce and strawberries), the waiting period between biosolids application and harvest is 14 to 38 months. Thus, Class B biosolids application is impractical for these crops.

Table 12.—Site management requirements for Class A and B biosolids.[a]

Biosolids class	Limit public access?[b]	Waiting period before grazing or crop harvest?	Regulatory agency authorization required?	Buffer areas required?
A	no	no	no	no
B	365 days	30 days	yes	yes

[a] This table gives general explanatory information on site management required by USEPA. For Class B biosolids, the required site management practices are included in site approvals issued by the regulatory agency.

[b] Privately owned farmland meets the USEPA's definition of "limited public access."

Questions about biosolids

What limits the rate of biosolids that can be applied?

Application rates are based on supplying N for the crop, without excessive nitrate leaching.

Is there a limit to the amount of biosolids that can be applied to a site?

If biosolids meet Exceptional Quality (EQ) limits (see page 9), there is no limit to the cumulative amount of biosolids that can be applied. (Annual application rates are based on crop N needs.) If one element exceeds the Exceptional Quality Limit, but is below the Ceiling Limit, then site life is based on the cumulative amount of that trace element applied to the site.

For most biosolids that don't meet EQ standards, the calculated site life is more than 50 years. The maximum cumulative amount of a trace element that can be applied during a site's life includes a large margin of safety. After the cumulative limit is reached, the site still will be productive for growing crops.

Are permitted levels for heavy metals and other trace elements likely to change in the future?

The federal biosolids rule adopted by USEPA in 1993 was based on more than 20 years of university research. This research included numerous worst-case studies, where sewage sludges containing high trace element concentrations (2 to 20 times greater than current concentrations) were applied at very high rates (10 to 50 times the agronomic rate). The current biosolids regulations are based on this extensive research base, and are unlikely to change in the near future.

The National Academy of Sciences reviewed USEPA's trace element standards in 1995 and published an extensive report concluding: "While no disposal or reuse option can guarantee complete safety, the use of these materials (biosolids) in the production of crops for human consumption, when practiced in accordance with existing federal guidelines and regulations, presents negligible risk to the consumer, to crop production, and to the environment."

How big of a problem are odors generated by biosolids application?

Odors produced by biosolids application generally are less than for animal by-products such as dairy or chicken manure. The same processes that kill pathogens in biosolids (e.g., digestion) also reduce odor after application. Tillage after biosolids application reduces odor.

What concerns might my neighbors have about a biosolids application?

Neighbors may object to potential nuisances associated with biosolids application such as truck traffic, dust, and odor. They also have concerns about protection of local water resources such as wells, streams, and lakes. They also may have health concerns. Biosolids transportation and application practices can be modified to address neighbor concerns. Ask the agency that will provide the biosolids to visit with neighbors before the biosolids application.

How much time is required for biosolids application relative to conventional inorganic fertilizer application?

Biosolids application is much slower than conventional fertilizer application, because of the large quantities of material involved. Several weeks may be required to complete application to large fields. Because of the slower pace of biosolids application, perennial grass pastures are the most common application sites. Annual crops can be fertilized with biosolids, but careful scheduling is required.

If biosolids are a valuable resource, why are they provided at no charge to the landowner?

Not all biosolids are free. Some municipalities charge a transportation fee, an application fee, or a fee equal to the nitrogen value of the biosolids. In other cases, biosolids application is free, which compensates for landowners' time and effort. Often, field operations must be scheduled to accommodate biosolids application, and management practices specified by the regulatory agency (see Table 12) must be followed after application.

For More Information

OSU Extension publications

Huddleston, J.H. and M.P. Ronayne. Revised 1995. *Guide to soil suitability and site selection for beneficial use of domestic wastewater biosolids*, Manual 8 (Oregon State University, Corvallis, OR). $3.25

Marx, E.S., J. Hart and R.G. Stevens. 1996, reprinted 1997. *Soil test interpretation guide*, EC 1478 (Oregon State University, Corvallis, OR). $1.50

Sullivan, D.M. 1996. *Biosolids recycling in Oregon*, EC 1471 (Oregon State University, Corvallis, OR). No charge.

To order copies of Oregon State University Extension Service publications, send the publication's complete title and series number, along with a check or money-order for the amount listed, to:

Publication Orders
Extension & Station Communications
Oregon State University
422 Kerr Administration
Corvallis, OR 97331-2119

Fax: 541-737-0817
World Wide Web: eesc.orst.edu

You may order up to six no-charge publications without charge. If you request seven or more no-charge publications, include 25 cents for each publication beyond six.

Discounts are available on orders of 100 or more copies of a single title. Please call 541-737-2513 for price quotes.

WSU Cooperative Extension publication

Cogger, C.G. and D.M. Sullivan. 1998. *Worksheet for calculating biosolids application rates in agriculture* (Washington State University, Pullman, WA, in review).

To order copies of Washington State University Cooperative Extension publications, send the publication's complete title and series number, along with payment, to:

Cooperative Extension Publications
Bulletins Office
Washington State University
P.O. Box 645912
Pullman, WA 99164-5912

Phone: 1-800-723-1763
e-mail: bulletin@coopext.cahe.wsu.edu
World Wide Web: http://www.cahe.wsu.edu/~infopub

WSU accepts Visa and MasterCard (minimum $5.00 order), purchase orders (minimum $10.00 order), and check (make checks payable to Cooperative Extension Publications).

Government publications

Sullivan, D.M., D.M. Granatstein, C.G. Cogger, C.L. Henry, and K.P. Dorsey. 1993. *Biosolids management guidelines for Washington State.* Washington State Department of Ecology Publication 93-80 (Olympia, WA).

USEPA. 1994. *Biosolids recycling: beneficial technology for a better environment*, EPA Publ. 832-R-94-009 (Office of Water Resource Center, 401 M St SW (RC-4100), Washington, DC 20460).

USEPA. 1993. *A plain English guide to the EPA biosolids rule*, EPA Publ. 832-R-93-003 (Office of Wastewater Enforcement and Compliance).

Research articles available from libraries

Cogger, C.G., D.M. Sullivan, A.I. Bary, and J.A. Kropf. 1998. Matching plant-available nitrogen from biosolids with dryland wheat needs. J. Prod. Ag. 11:41–47.

Cuhna, T.J. 1987. *Salt and trace minerals for livestock, poultry and other animals* (Salt Institute, 206 N. Washington St., Alexandria, VA 22314).

Kiemnec, G.L., D.D. Hemphill, M. Hickey, T.L. Jackson, and V.V. Volk. 1990. Sweet corn yield and tissue metal concentration after seven years of sewage sludge applications. J. Prod. Agric. 3:23–237.

Kiemnec, G.L., T.L. Jackson, D.D. Hemphill, and V.V. Volk. 1987. Relative effectiveness of sewage sludge as a nitrogen fertilizer for tall fescue. J. Environ. Qual. 16:353–356.

National Academy of Sciences. 1996. *Use of reclaimed water and sludge in food crop production* (National Academy Press, Washington, DC). 178 pp.

Sullivan, D.M., S.C. Fransen, C.G. Cogger, and A.I. Bary. 1997. Biosolids and dairy manure as nitrogen sources for prairiegrass on a poorly-drained soil. J. Prod. Ag. 10:589–596.

Research article available from Dan Sullivan

Contact the Department of Crop and Soil Science, Oregon State University.

Sullivan, D.M., A.I. Bary, J.A. Kropf, and D.M. Granatstein. 1995. Biosolids fertilization for dryland Pacific Northwest wheat production. p. 2.1-2.16. In: *Proc. USEPA Biosolids Symposium, Effects of land application of biosolids in arid and semi-arid environments* (Colorado State University, Fort Collins, CO, 16–19 May 1995).

©1998 Oregon State University

Published and distributed in furtherance of the Acts of Congress of May 8 and June 30, 1914, by the Oregon State University Extension Service, Washington State University Cooperative Extension, the University of Idaho Cooperative Extension System, and the U.S. Department of Agriculture cooperating.

The three participating Extension Services offer educational programs, activities, and materials—*without regard to race, color, religion, sex, sexual orientation, national origin, age, marital status, disability, and disabled veteran or Vietnam-era veteran status*—as required by Title VI of the Civil Rights Act of 1964, Title IX of the Education Amendments of 1972, and Section 504 of the Rehabilitation Act of 1973. The Oregon State University Extension Service, Washington State University Cooperative Extension, and the University of Idaho Cooperative Extension System are Equal Opportunity Employers. $2.00

Published June 1998.

APPENDIX E

GLOSSARY

GLOSSARY

Aerobic Digestion: The degradation of organic matter brought about through the action of microorganisms in the presence of elemental oxygen for purposes of stabilization, volume reduction, and pathogen reduction. The process is carried out in a tank or other vessel called a digester.

Agricultural Land: Land on which food, feed, or fiber crops are grown. This includes range land and/or land used as pasture.

Agronomic Rate: The whole biosolids application rate designed to provide the amount of nitrogen needed for the crop or vegetation grown on the land and designed to minimize the amount of nitrogen in the biosolids that passes below the root zone of the crop or vegetation grown on the land, to the ground water.

Ammonia Nitrogen: The quantity of elemental nitrogen present in the form of ammonia (NH_3) normally present at fairly high levels in biosolids. This form of nitrogen is readily converted to nitrate nitrogen and, therefore is considered to be immediately available to plants, or may be lost to the atmosphere (volatized if surface applied.)

Anaerobic Digestion: The degradation of organic matter brought about through the action of microorganisms in the absence of elemental oxygen for purposes of stabilization, volume reduction and pathogen reduction. The process is carried out in a tank or other vessel called a digester.

Annual Pollutant Loading Rate (APLR): The maximum amount of a pollutant that can be applied to a unit area of land during a 365-day period. This term describes pollutant limits for biosolids that is given away or sold in a bag or other container for application to the land.

Annual Whole Biosolids Application Rate: The maximum amount of biosolids on a dry weight basis that can be applied to a land application site during a 365-day (1-year) period.

Beneficial Use: Taking advantage of the nutrient content and soil conditioning properties of an organic waste product to supply some or all of the fertilizer needs of an agronomic crop or stabilizing vegetative cover.

Biosolids: A primarily organic solid product produced by wastewater treatment processes that can be beneficially used. They are the treated solid, semi-solid, or liquid residues generated during the treatment of domestic sewage in a wastewater treatment facility (such facilities may also receive an industrial component). Biosolids meet all of the Part 503 pollutant concentration, pathogen reduction, and vector attraction reduction criteria. The residues include, but are not limited to, scum or solids removed in primary, secondary, or advanced wastewater treatment processes, but do not include grit and screenings generated during the preliminary treatment of domestic sewage.

Buffer: An area of land that designates a zone of separation between possible conflicting land uses.

Bulk Biosolids: Biosolids not sold or given away in a bag or other container (with a load capacity of one metric ton or less) for application to the land.

California Environmental Quality Act (CEQA): The California legislative enactment which requires public agencies to assess the environmental impacts of public and private projects before governmental authorization of the project is granted.

CFR: Code of Federal Regulations. A document of the United States Government presenting federal agency rules, regulations, and guidelines.

Class A Biosolids: Biosolids meeting Part 503 Class A pathogen reduction requirements.

Class B Biosolids: Biosolids meeting Part 503 Class B pathogen reduction requirements.

Cumulative Pollutant Loading Rate (CPLR): The maximum amount of an inorganic pollutant that can be applied to an area of land. This term applies to bulk biosolids that are land applied.

CWEA: California Water Environment Association. A professional organization of administrators, engineers, ant treatment plan operators engaged in water quality enhancement and water pollution abatement in California.

Dewatered Biosolids: The biosolids remaining after removal of water by draining, centrifugation, filtering or pressing.

Domestic Sewage: Waste and wastewater from humans or household operations that are discharged to or otherwise enter a treatment works.

Exceptional Quality Biosolids: Biosolids that meet the most stringent limits for pollutant concentrations, pathogen reduction and vector attraction reduction.

Feces: Excrement from the gastrointestinal tract, consisting of residue from food digestion and bacterial action.

Hazardous Waste: Any waste that is potentially damaging to environmental health because of toxicity, ignitability, corrosivity, chemical reactivity, or other action.

Humus: The dark-colored carboniferous residue in the soil resulting from the decomposition of vegetable tissues of plants. The relatively resistant fraction of soil organic matter that forms during biological decomposition of organic residues. Humus usually constitutes the major fraction of soil organic matter.

Inorganic Nitrogen: Nitrogen that is in the ammonium (NH_4^+) or nitrate (NO_3^-) form, either in biosolids or in the soil.

Land Application: The placement of biosolids on land at a predetermined rate to support vegetative growth.

Land Application Field: A discrete area of land within a land application site that is the smallest unit of land for which monitoring, record keeping, and reporting requirements apply.

Land Application Site: An area of land covered by a single permit on which biosolids are land applied to condition the soil or to fertilize crops or vegetation grown in the soil.

Leachate: Liquid that has percolated through permeable material and has extracted soluble dissolved or suspended materials from it.

Leaching: Removal of soluble minerals, nutrients, organic chemicals, and pesticides from the soil by water passing through the soil.

Legume: A crop that forms a specific association with soil bacteria that are capable of fixing nitrogen, that is, transforming nitrogen gas to organically combined nitrogen. Common legumes include alfalfa, clovers, peas, and soybeans. Nitrogen fixation can provide most of the nitrogen of the crop, and it can provide large amounts of residual nitrogen for succeeding crops.

Macronutrients: An element required in large amounts for the growth and development of plants such as nitrogen, phosphorus, and potassium.

Micronutrients: Essential plant foods usually required in minute quantities such as zinc, iron, copper.

Microorganisms: Microscopic organisms, either plant or animal, invisible or barely visible to the naked eye. Examples are algae, bacteria, fungi, protozoa, and viruses.

Mineralization: Biochemical conversion of nitrogen in the organic matter of soils and biosolids to inorganic nitrogen. Mineralization produces nitrogen in the ammonium (NH_4^+) form, which is then converted to the nitrate (NO_3^-) form by the nitrification process.

Moisture Content: The quantity of water present in soil, biosolids, or residual solids, usually expressed in percentage of wet weight.

Monitoring: Routine observation, sampling, and testing of designated locations and/or parameters to determine efficiency of treatment or compliance with standards or requirements.

Nitrate Nitrogen: A form of nitrogen which is oxidized from ammonia nitrogen. It is a soluble form which is immediately available to plants, does not volatilize, and may move downward through the soil to contaminate groundwater. Nitrate is usually present in small amounts in biosolids.

Nitrogen: An essential nutrient often present in biosolids as ammonia, nitrate, nitrite, and organic nitrogen.

Nutrient: Any substance that is assimilated by organisms and promotes growth. The term generally refers to nitrogen, phosphorus, and potassium in agriculture, but can also apply to other essential and trace elements.

Organic Nitrogen: Nitrogen that is combined in the molecular structure of organic compounds. Most of the organic nitrogen in soils occurs as proteins and amino acids or amine groups.

PAN: Plant Available Nitrogen. Nitrogen primarily in the form of nitrate or ammonia ions readily available to plants.

Pathogens: Disease-causing organisms such as bacteria, protozoa, viruses, and parasites.

Percolation: The movement of flow of water through the interstices or the pores of a coil or other porous medium.

Permeability: The rate that water moves through the soil. Permeability depends on the amount, size, and interconnectedness of soil pores. These in turn are related to soil texture, soil structure, and soil density.

PFRP: Process to further reduce pathogens as defined in Appendix B to Part 503-Pathogen Treatment Processes.

pH: A number that indicates the relative acidity or alkalinity of a material. A pH of 7.0 indicates a neutral material. Lower numbers indicate acidic materials. Higher numbers indicate alkaline materials.

Ponding: The process of creating a still, shallow body of water, smaller than a lake, usually very small accumulations of water on the soil surface.

Water Table: The top of a zone of saturated soil. Water tables in soils are classified as perched, apparent, or artesian. A perched water table refers to a zone of saturation that is underlaid by unsaturated soil. Perched water tables are associated with restrictive layers. An apparent water table refers to a thick zone of saturated soil in which there is no evidence of restrictive layers. An artesian water table refers to water under pressure that is trapped beneath an impermeable layer. The water table rises when the impermeable layer is breached.